Project : Yoga27-ACH2 AMD FP6

PCB Size : 293 X 222.5 X 1.2 mm

Document No : X1.0

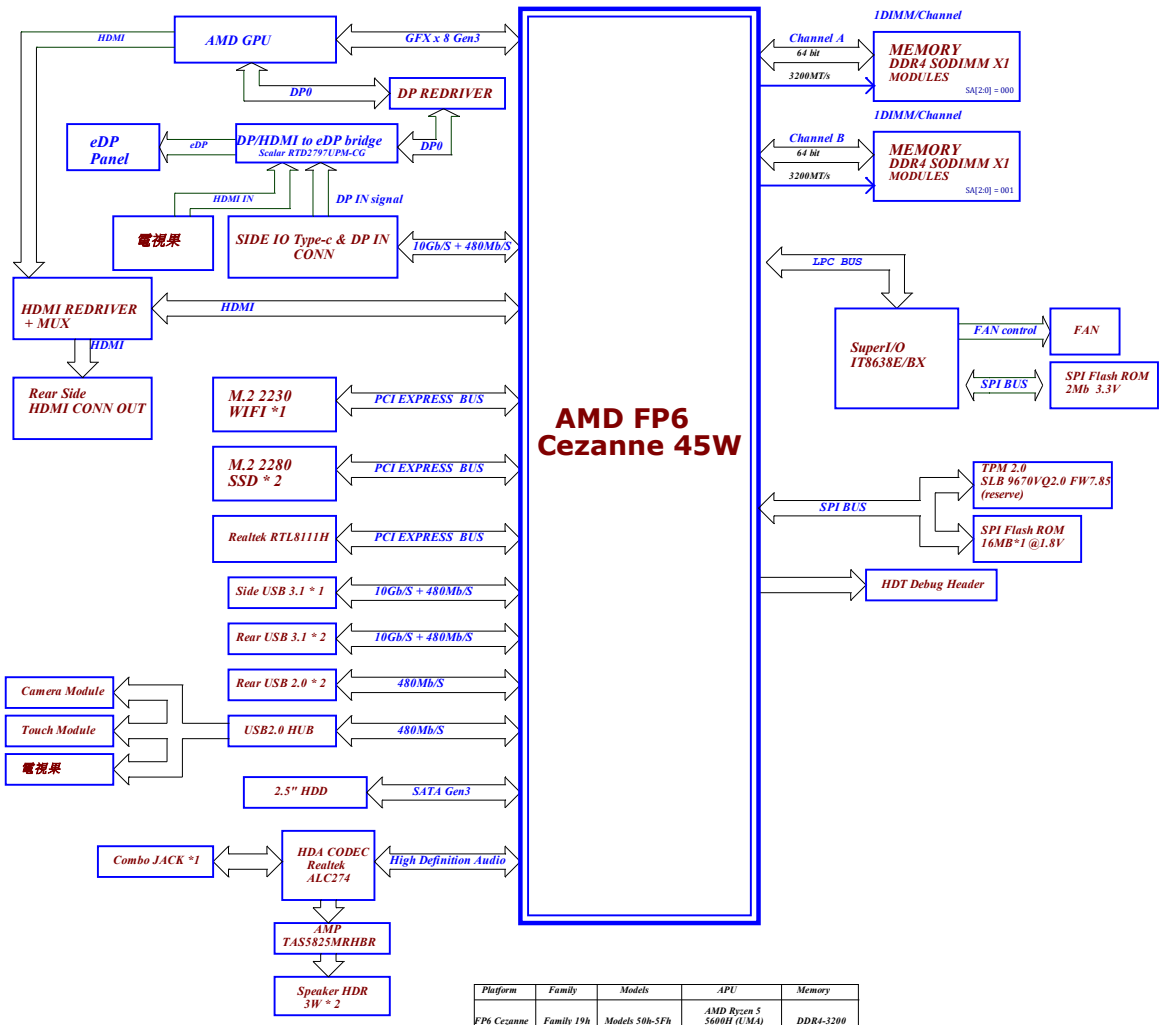

Platform	Family	Models	APU	Memory
FP6 Cezanne	Family 19h	Models 50h-5Fh	AMD Ryzen 5 5600H (UMA) AMD Ryzen 7 5800H (DIS)	DDR4-3200

PAGE	TITLE
01	Block Diagram
02	Power Sequence
03	Power Delivery Map
04	RESET MAP
05	CLOCK DIAGRAM
06	SMBUS MAP
07	FP6 PCIE I/F
08	FP6 MEM
09	FP6 DISPLAY/MISC
10	FP6 ACPI/AZ/SD/I2C/GPIO/FCH
11	FP6 USB/Strap pin
12	FP6 CLK/SPI
13	FP6 POWER AND DECOUPLING
14	FP6 GND
15	SPI ROM
16	HDMI REDRIVER
17	DDR4 CHB SO-DIMM2 -8H
18	DDR4 CHA SO-DIMM1 -4H
19	USB2.0 REDRIVER / CAM_FP
20	PWRGD & Bleed Off
21	Rear IO USB2.0
22	REAR IO USB3.1
23	WEBCAM / SIDE USB3.1
24	USB2.0 HUB / TOUCH
25	SATA HDD / MUX
26	USB2.0 HUB / SATA TRA
27	DP IN(Type-C)
28	HDMI 2.0 OUT
29	Wireless screen
30	M.2 SSD PCIE X 4 / WIFI_BT
31	M.2 SSD CONN2
32	LAN RTL8111H
33	TPM2.0
34	AUDIO CODEC ALC274
35	Audio JACK
36	AMP TAS5825MRHBR
37	I2S Switch
38	SuperI/O IT8638E/BX
39	Debug LED
40	DP REDRIVER
41	eDP 4K Connector
42	Scaler Power
43	+1V1 S5 Scalar/+1V5 S5 Scalar
44	+10V LVDS&+1V15 S5 OFF
45	Scalar RTD2797UPM-CG 1
46	Scalar RTD2797UPM-CG 2
47	+20V S5 ADP/INA300
48	+5V/+3V3 S5
49	+12V/+5V S0
50	+1V8 S5 /+1V8 S0
51	+1V2 DDR4 S3/+0V6 DDR4 VTT
52	+VDDP S5&VDDP S0
53	+2V5 VPP DDR
54	+VDDCR CPU&SOC Controller
55	+VDDCR CPU 1~3ph Out
56	+VDDCR CPU 4ph+VDDCR SOC 1ph
57	+VLED OZ554 QHD
58	Scalar RTD2797UPM-CG 3
59	GFX PCIe Interface
60	EE Change List 1
61	EE Change List 2
62	EE Change List 3
63	EE Change List 4
64	+12V S5
65	Mounting Hole/ PCB/ Metal
66	BUCK BOOST PD
67	HSIO Port Map
68	FAN/BTN/FPM/Sensor
69	BLOCK USER GUIDE
70	+3V3 S0
71	

Asia Vital Components Co., Ltd.

Title: P01 Block Diagram

Size: Custom | Document Number: Yoga27-ACH2 AMD FP6 | Rev: X10

Date: Thursday, April 29, 2021 | Sheet 1 of 70

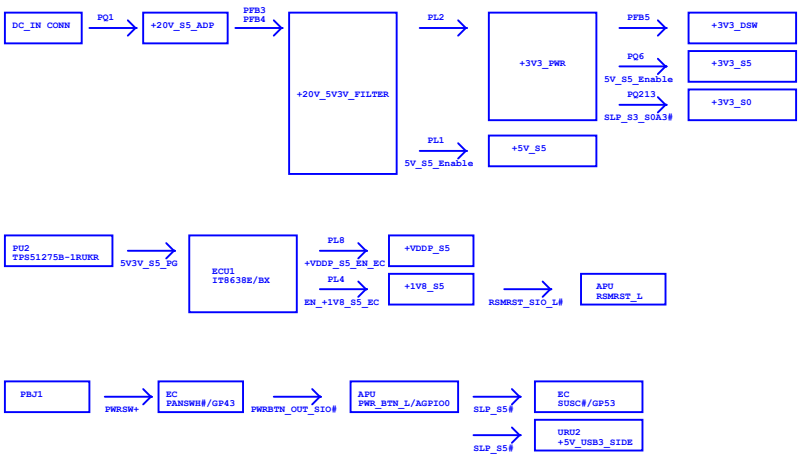

www.teknisi-indonesia.com

AVC Asia Vital Components Co., Ltd.			
Title: P02 Power Sequence			
Size: C	Document Number: Yoga27-ACH2 AMD FP6		Rev: X10
Date: Thursday, April 29, 2021	Sheet 2 of 70		

Power Map

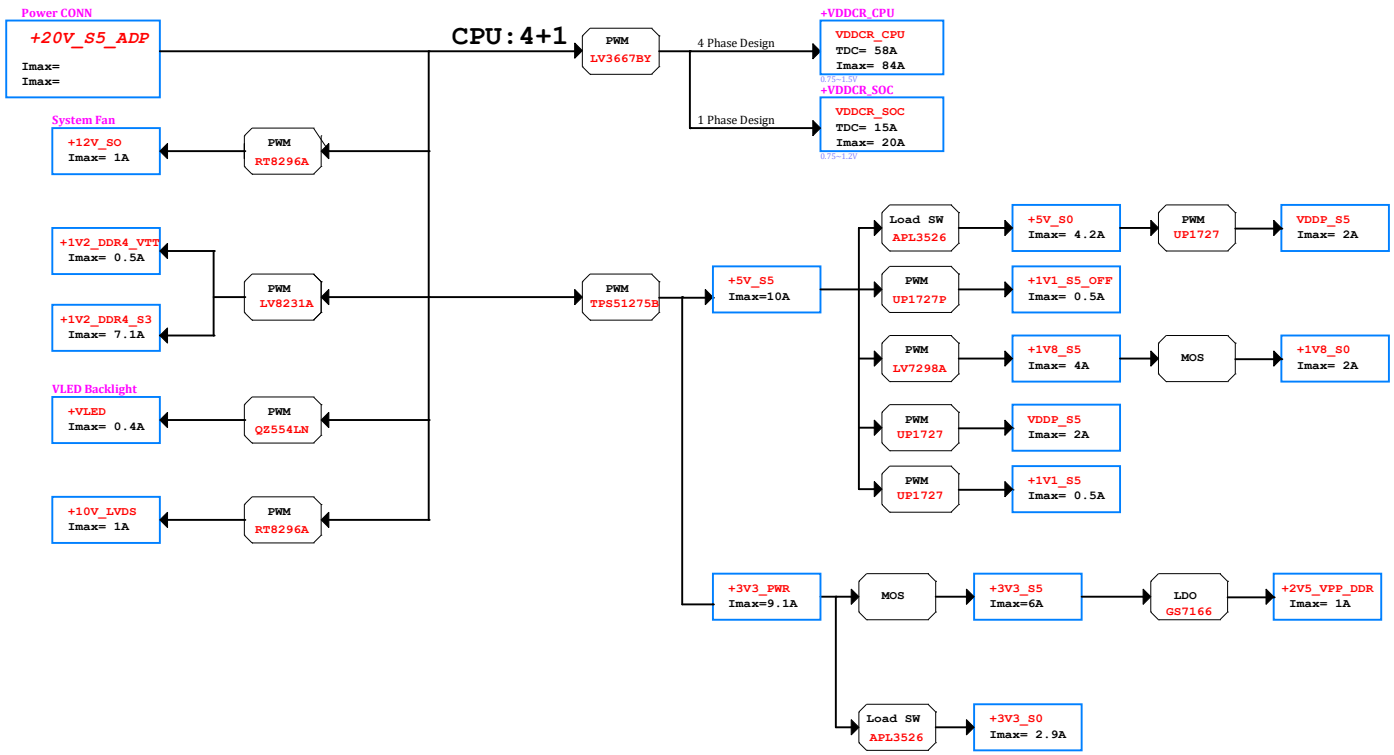

AVC Asia Vital Components Co., Ltd.			
Title: P03 Power Delivery Map			
Size: C	Document Number: Yoga27-ACH2 AMD FP6		Rev: X10
Date: Thursday, April 29, 2021	Sheet 3 of 70		

AMD RST MAP

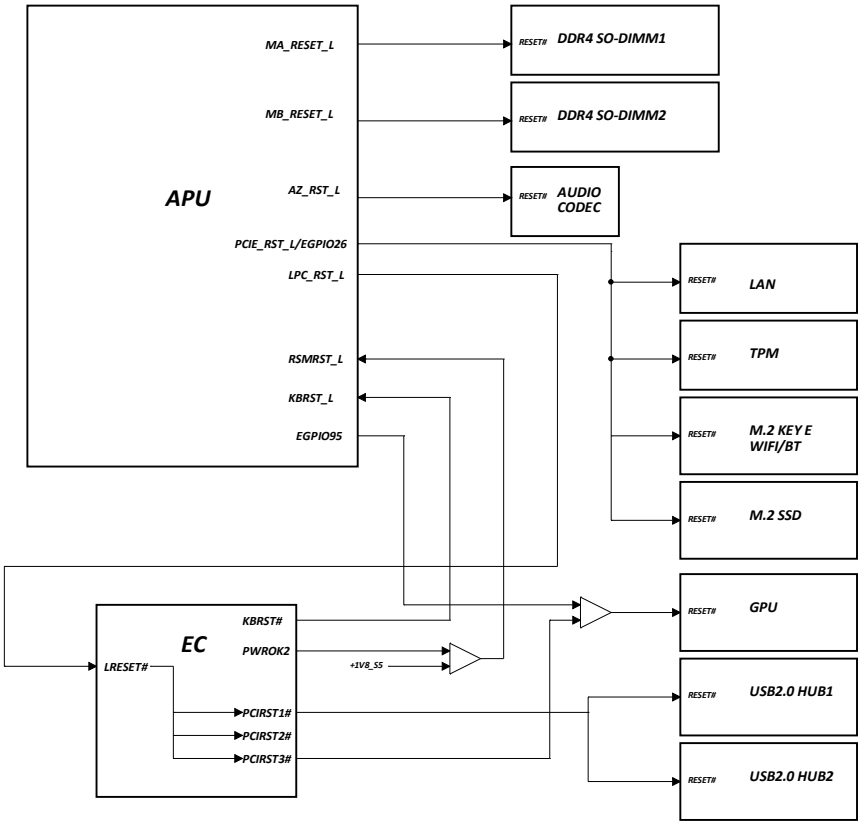

AVC Asia Vital Components Co., Ltd.			
Title: P04 RESET MAP			
Size: C	Document Number: Yoga27-ACH2 AMD FP6		Rev: X10
Date: Thursday, April 29, 2021	Sheet 4 of 70		

CLOCKS DIAGRAM

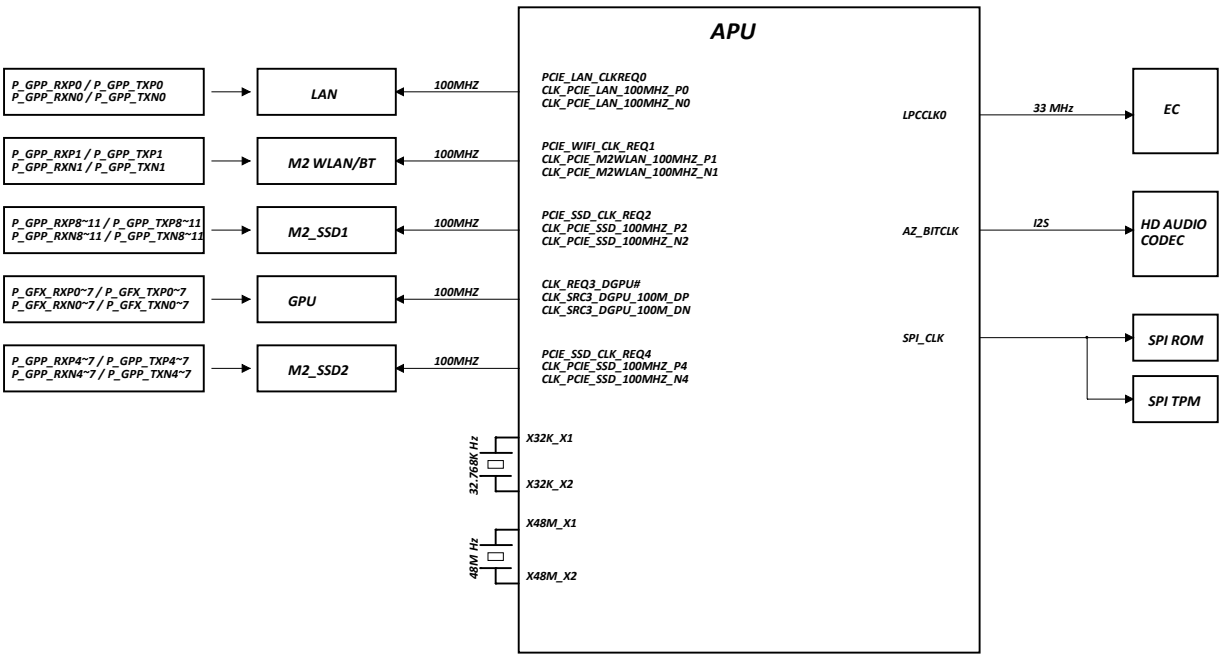

AVC Asia Vital Components Co., Ltd.			
Title: P05 CLOCK DIAGRAM			
Size: C	Document Number: Yoga27-ACH2 AMD FP6		Rev: X10
Date: Thursday, April 29, 2021		Sheet 5 of 70	

SMBus MAP

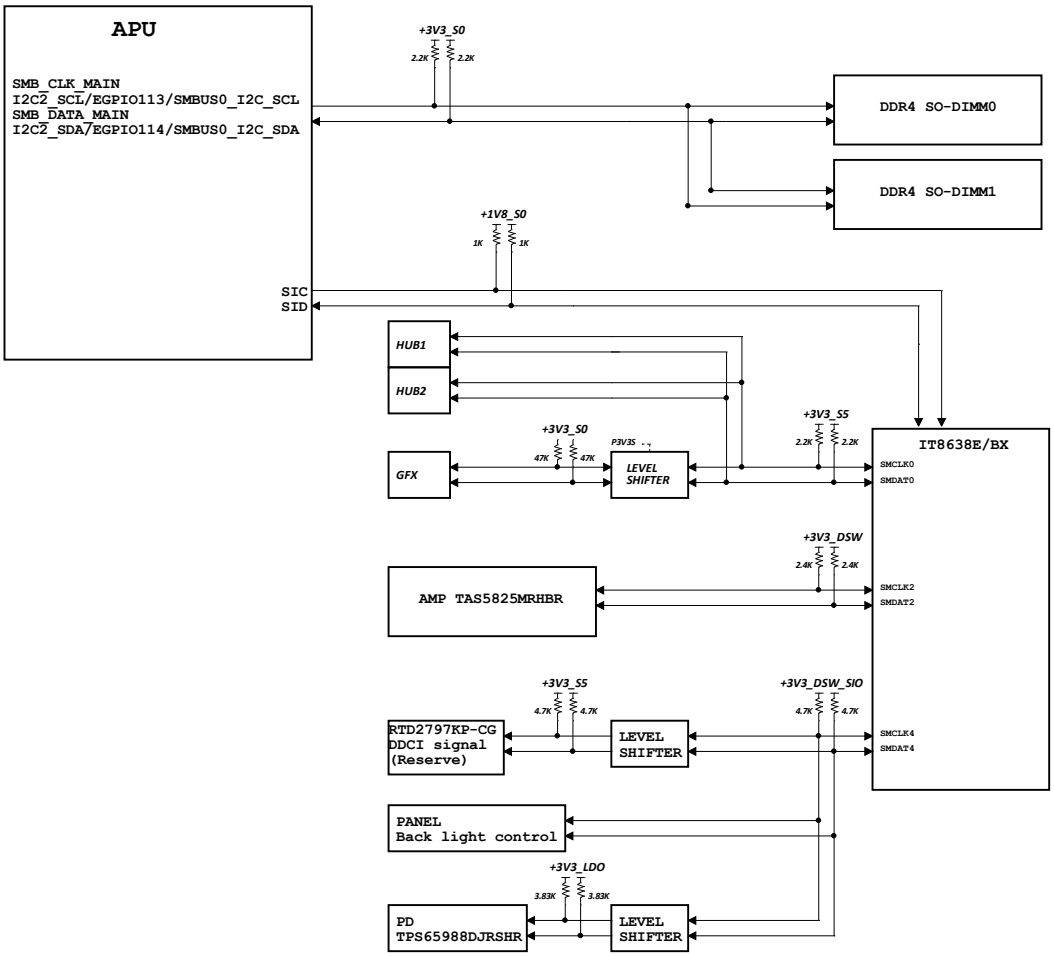

AVC Asia Vital Components Co., Ltd.			
Title: P06 SMBUS MAP			
Size: C	Document Number: Yoga27-ACH2 AMD FP6		Rev: X10
Date: Thursday, April 29, 2021	Sheet 6 of 70		

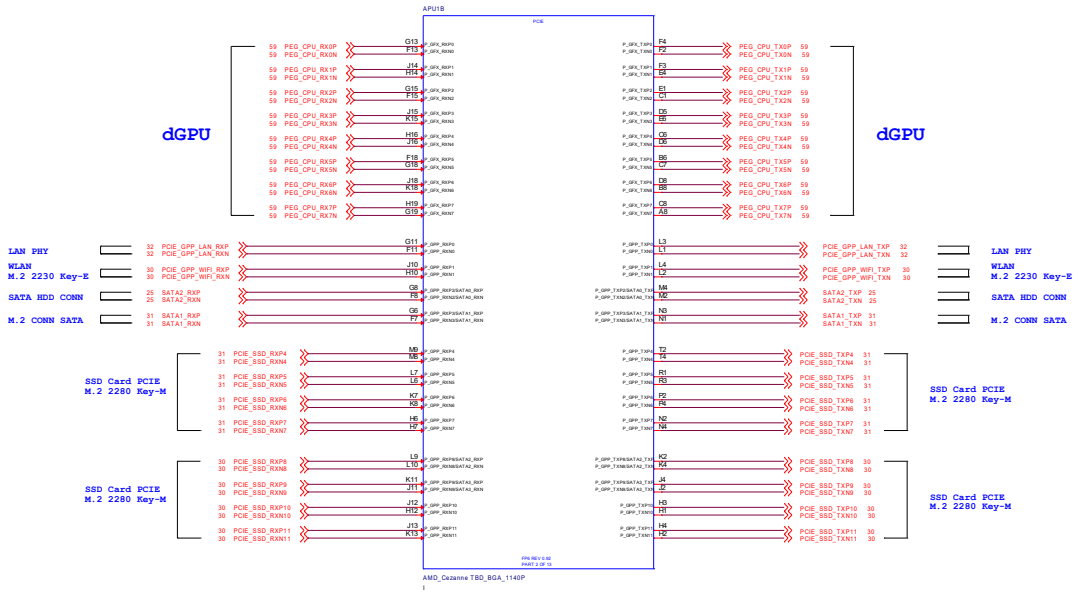

www.teknisi-indonesia.com

AVC Asia Vital Components Co., Ltd.			
Title: P07 FP6 PCIE I/F			
Size: C	Document Number: Yoga27-ACH2 AMD FP6		Rev: X10
Date: Thursday, April 29, 2021	Sheet 7 of 70		

teknisi-indonesia.com

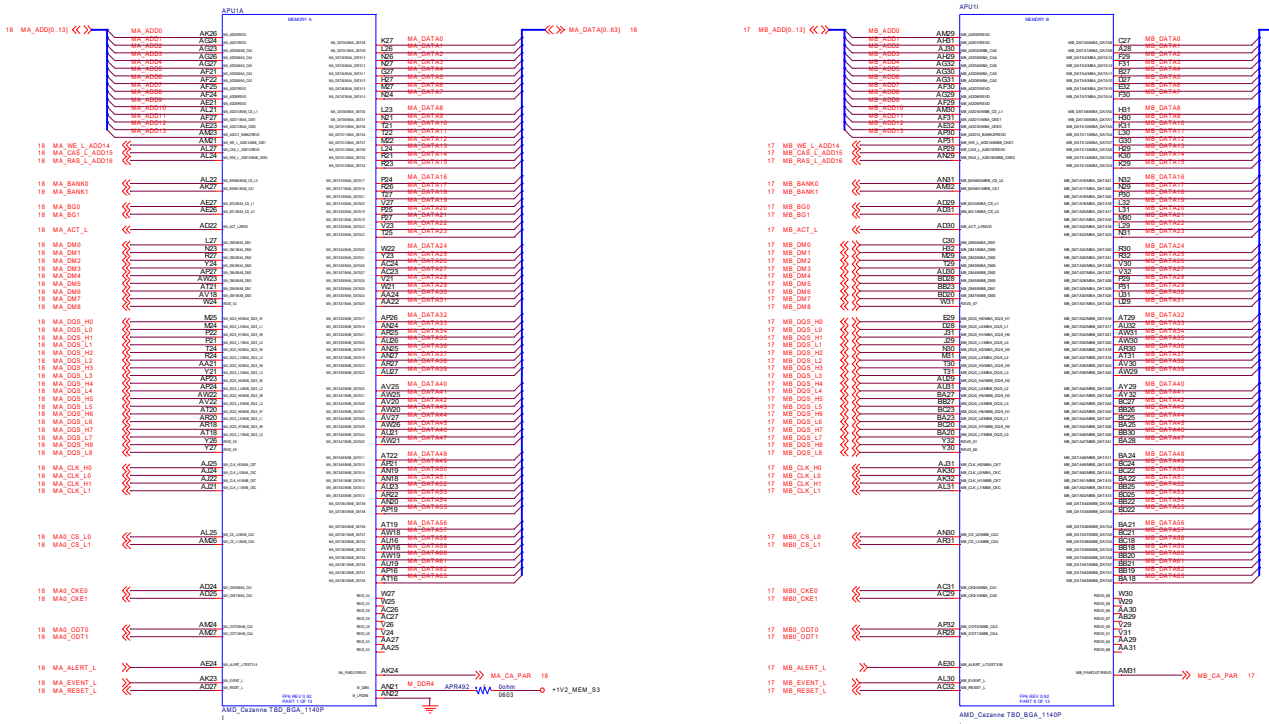

Asia Vital Components Co., Ltd.

Title		
P08 AM4 MEM		
Size: C	Document Number: Yoga27-ACH2 AMD FP6	Rev: X10
Date: Thursday, April 29, 2021	Sheet 8 of 70	

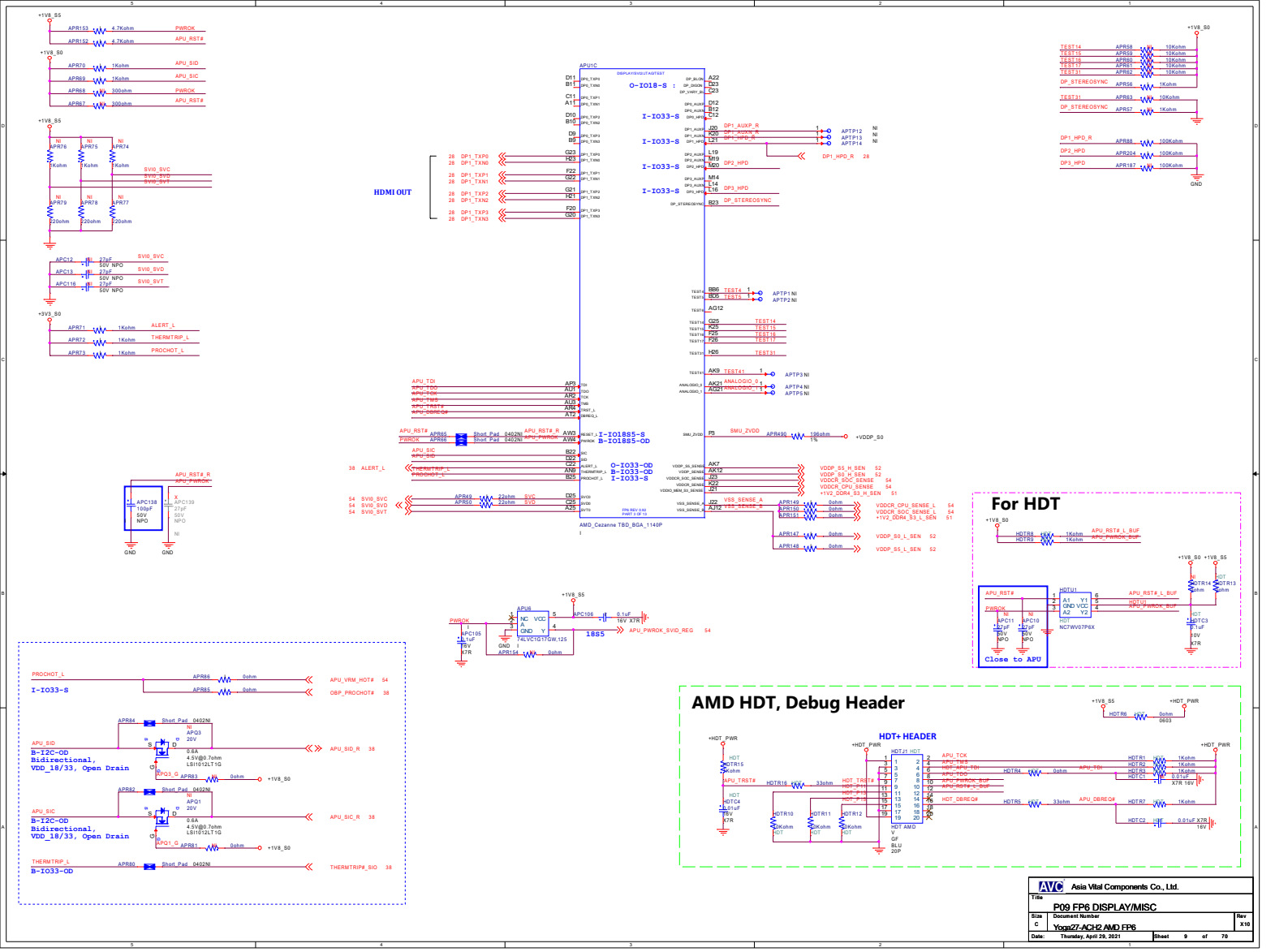

Asia Vital Components Co., Ltd.

Title	P09 FP6 DISPLAY/MISC	
Size C	Document Number Yoga27-ACH2 AMD FP6	Rev X10
Date: Thursday, April 29, 2021	Sheet 9 of 70	

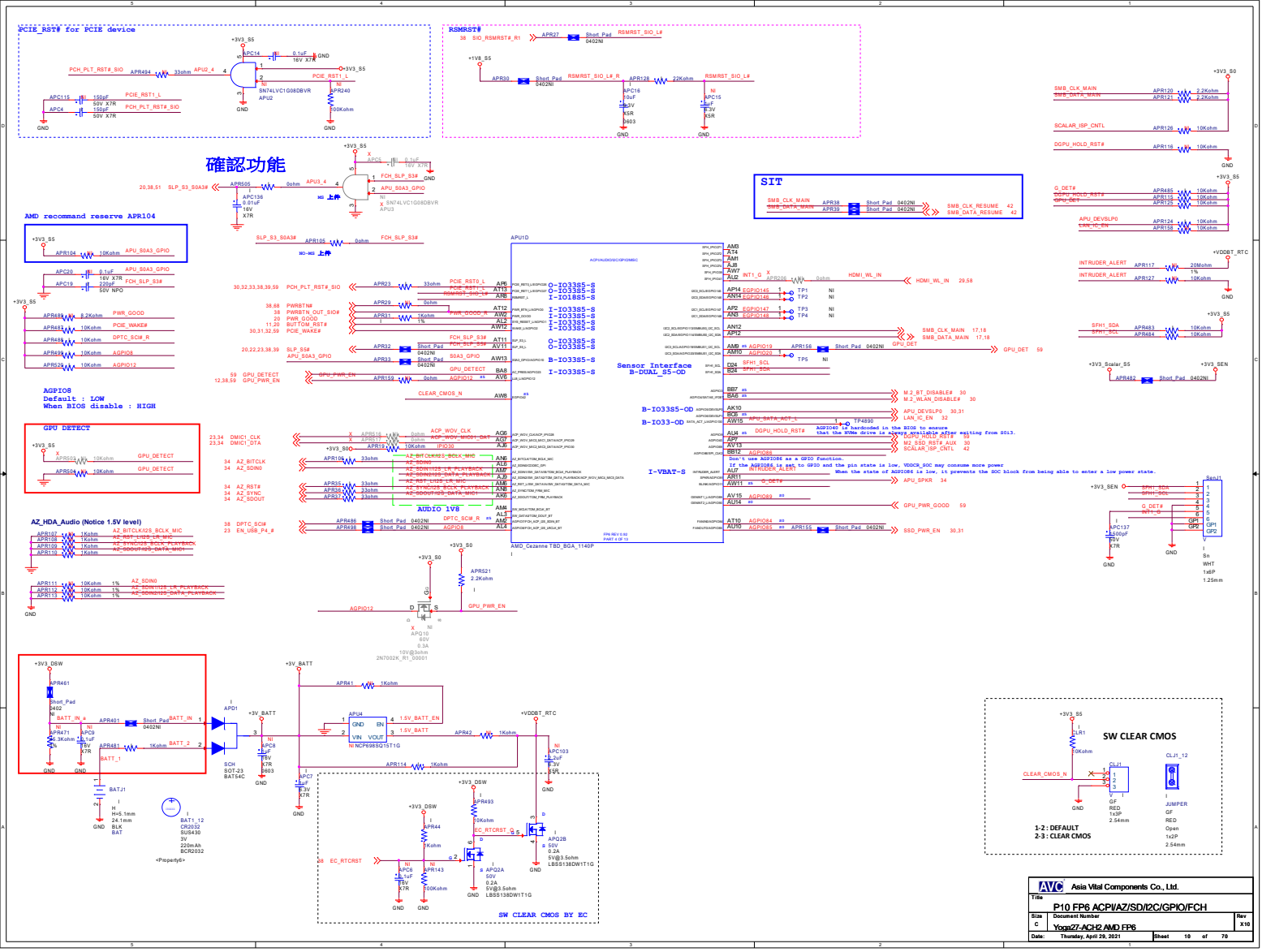
PCIE_RST# for PCIE device
RSMRST#
確認功能
SIT
AMD recommand reserve APR104
AGPIO8
Default : LOW
When BIOS disable : HIGH
GPU DETECT
AZ_HDA_Audio (Notice 1.5V level)
AUDIO 1V8
Sensor Interface
B-DUAL_S5-OD
B-IO3385-OD
B-IO33-OD
I-VBAT-S
SW CLEAR CMOS
1-2 : DEFAULT
2-3 : CLEAR CMOS
SW CLEAR CMOS BY EC
Asia Vital Components Co., Ltd.
P10 FP6 ACPI/AZ/SD/I2C/GPIO/FCH
Yoga27-ACH2 AMD FP6
Thursday, April 29, 2021

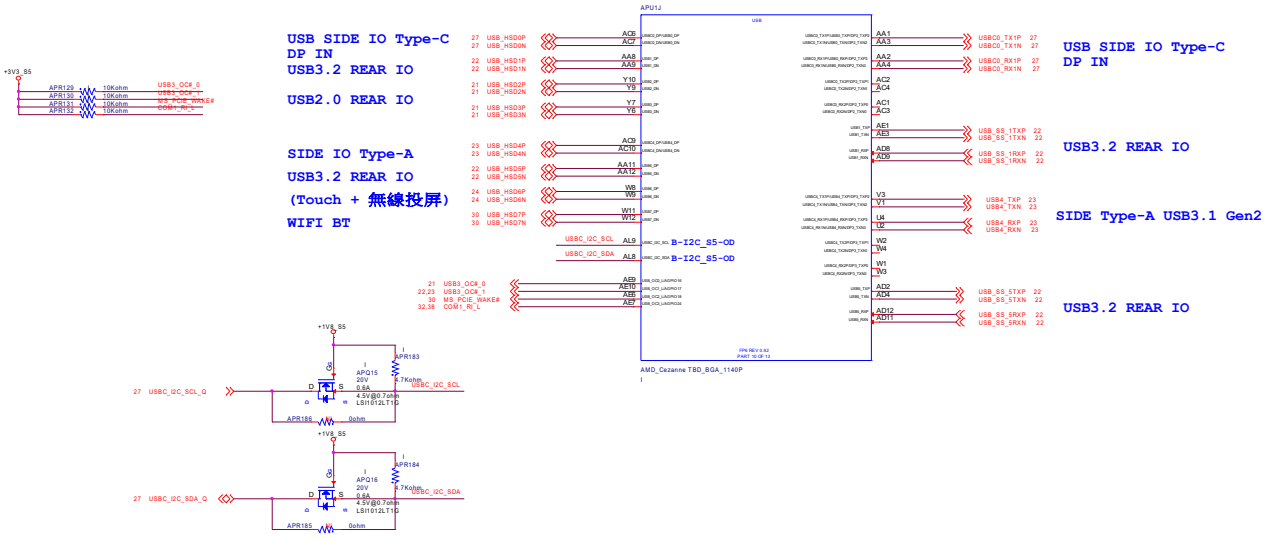

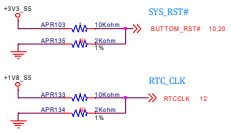

	SYS_RST#	SPI CLK	M_DDR4	M_LPDDR4
Pull High	1:NORMAL RESET MODE (DEFAULT)	1:USE 48MHZ CRYSTAL CLOCK AND GENERATE BOTH INTERNAL AND EXTERNAL CLOCKS (DEFAULT)	Enable DDR4 memory controller 0Ω (±5%) pull-up resistor or direct connect to VDDIO_MEM_S3	Disable LPDDR4x (need to have DDR4 enabled) 0Ω (±5%) pull-down resistor or direct connect to VSS
Pull Low	0:SHORT RESET MODE	0:USE 100MHZ PCIE CLOCK AS REFERENCE CLOCK AND GENERATE INTERNAL CLOCKS ONLY	Disable DDR4 (need to have LPDDR4x enabled) 0Ω (±5%) pull-down resistor or direct connect to VSS	Enable LPDDR4x memory controller 0Ω (±5%) pull-up resistor or direct connect to VDDIO_MEM_S3

Asia Vital Components Co., Ltd.

Title: P11 FP6 USB/Strap pin

Size: C | Document Number: Yoga27-ACH2 AMD FP6 | Rev: X10

Date: Thursday, April 29, 2021 | Sheet 11 of 70

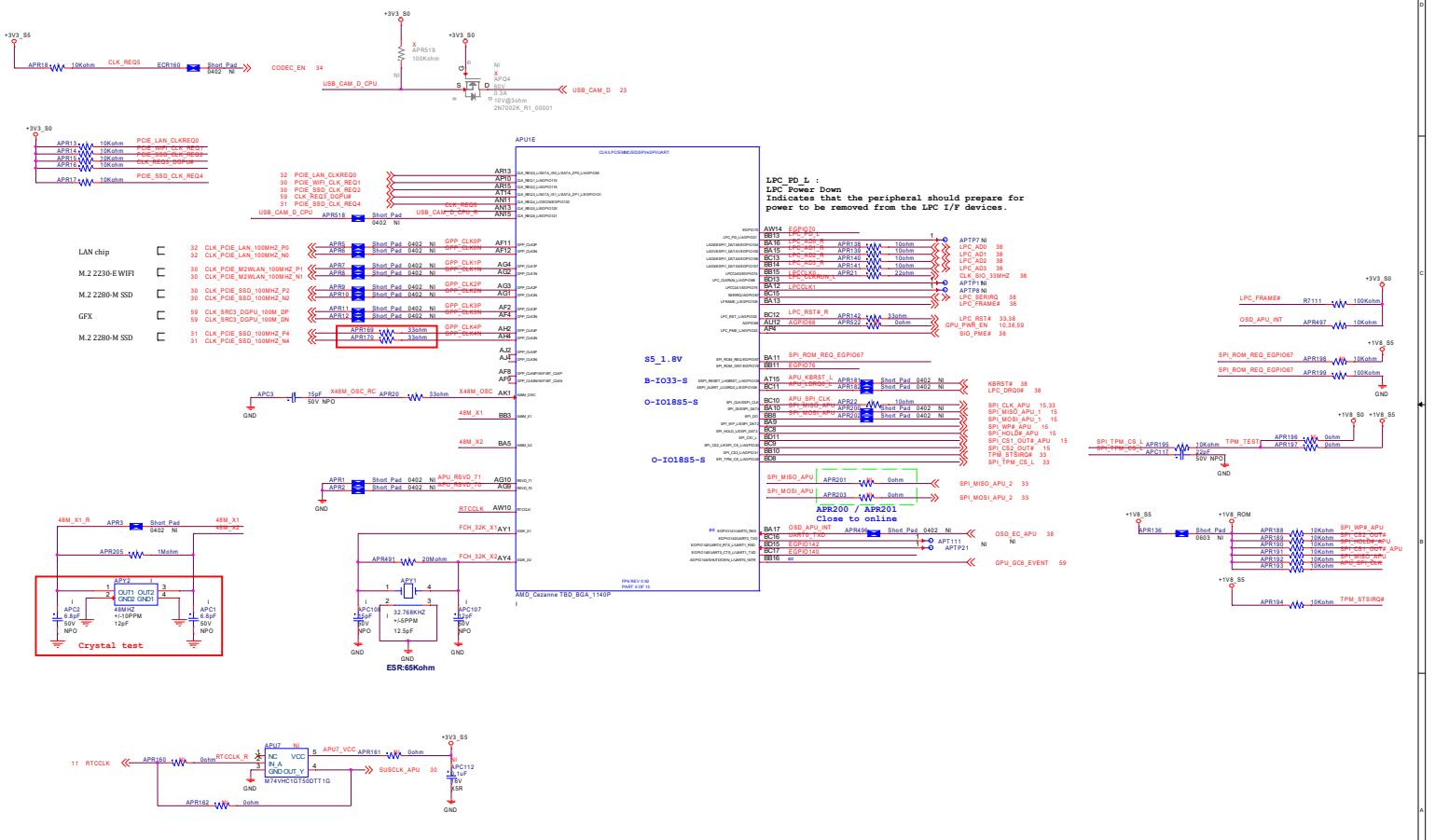

Asia Vital Components Co., Ltd.

Title		
P12 FP6 CLK/SPI		
Size C	Document Number Yoga27-ACH2 AMD FP6	Rev X10
Date: Thursday, April 29, 2021	Sheet 12 of 70	

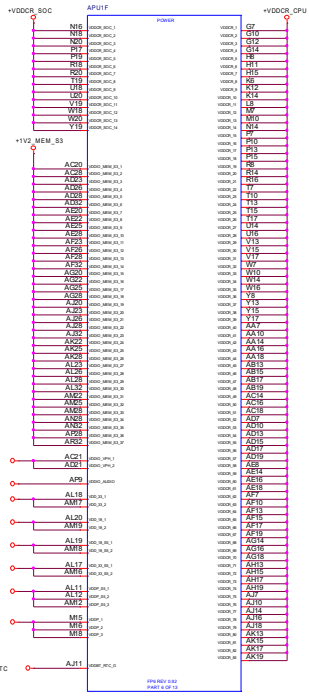

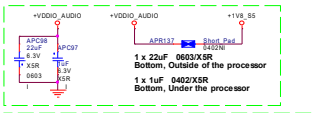

1 x 22uF 0603/X5R
Bottom, Outside of the processor

1 x 1uF 0402/X5R
Bottom, Under the processor

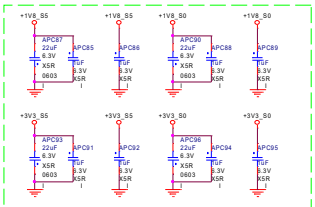

1 x 22uF 0603/X5R / 1 x 1uF 0402/X5R
Bottom, Outside of the processor

1 x 1uF 0402/X5R
Bottom, Under the processor

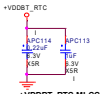

+VDDBT_RTC MLCC
Bottom, Under the processor

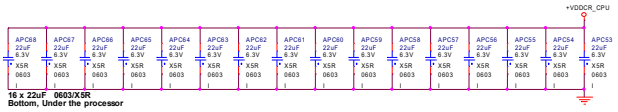

16 x 22uF 0603/X5R
Bottom, Under the processor

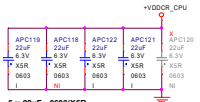

5 x 22uF 0603/X5R
Bottom, Under the processor
Reserved

1 x 180pF 0402/X9R
Bottom, Under the processor

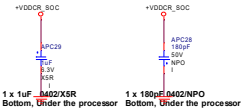

1 x 1uF 0402/X5R
Bottom, Under the processor

1 x 180pF 0402/NPO
Bottom, Under the processor

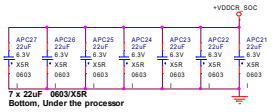

7 x 22uF 0603/X5R
Bottom, Under the processor

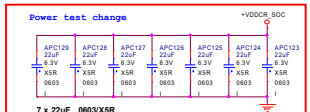

7 x 22uF 0603/X5R
Bottom, Under the processor
Reserved

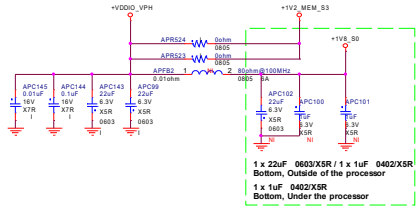

1 x 22uF 0603/X5R / 1 x 1uF 0402/X5R
Bottom, Outside of the processor

1 x 1uF 0402/X5R
Bottom, Under the processor

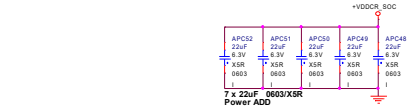

7 x 22uF 0603/X5R
Power ADD

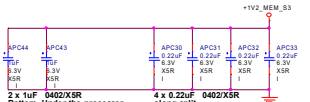

2 x 1uF 0402/X5R
Bottom, Under the processor

4 x 0.22uF 0402/X5R
along split

VDDIO_VPH	VDDIO_VPH is a dedicated power supply for DisplayPort 0. When • DP0 is used for eDP, connect VDDIO_VPH to VDDIO_MEM_S3 source (1.2V DDR4) or other 1.2V source to improve battery life. Or connect to VDD_18 source (1.8V) if no 1.2V source is available. • DP0 is used for DP or HDMI, connect VDDIO_VPH to VDD_18 source (1.8V).

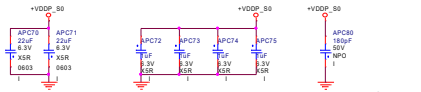

2 x 22uF 0603/X5R
Bottom, Outside of the processor

4 x 1uF 0402/X5R
Bottom, Under the processor

1 x 180pF 0402/NPO
Bottom, Under the processor

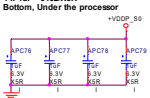

4 x 1uF 0402/X5R
Bottom, Outside of the processor

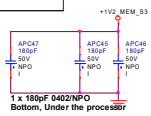

1 x 180pF 0402/NPO
Bottom, Under the processor

2 x 180pF 0402/NPO
along split

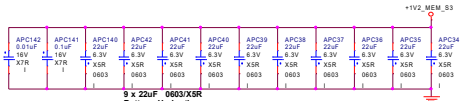

9 x 22uF 0603/X5R
Bottom, Under the processor

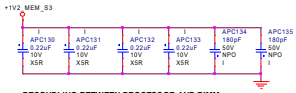

DECOUPLING BETWEEN PROCESSOR AND DIMMs
ACROSS VDDIO AND VSS SPLIT

4x0.22UF (0402)+2x180PF(0402)

VDDP_S5 is the voltage rail for the USB physical layer.

1 x 1uF 0402/X5R
Bottom, Outside of the processor

1 x 22uF 0603/X5R
Bottom, Outside of the processor

2 x 1uF 0402/X5R
Bottom, Under the processor

Asia Vital Components Co., Ltd.

Title	P13 FP6 POWER AND DECOUPLING	
Size C	Document Number Yoga27-ACH2 AMD FP6	Rev X10
Date: Thursday, April 29, 2021	Sheet 13 of 70	

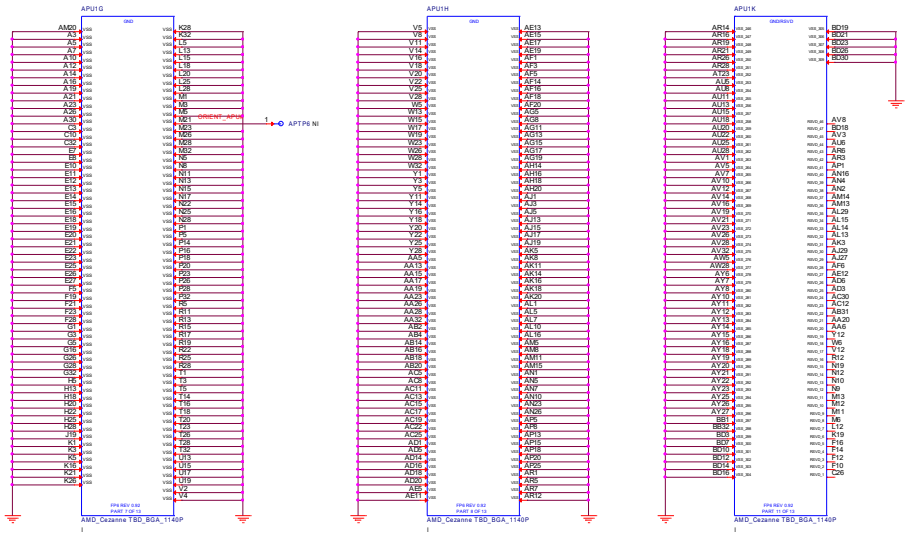

Asia Vital Components Co., Ltd.

Title	P14 FP6 GND	
Size C	Document Number: Yoga27-ACH2 AMD FP6	Rev X10
Date: Thursday, April 29, 2021	Sheet 14 of 70	

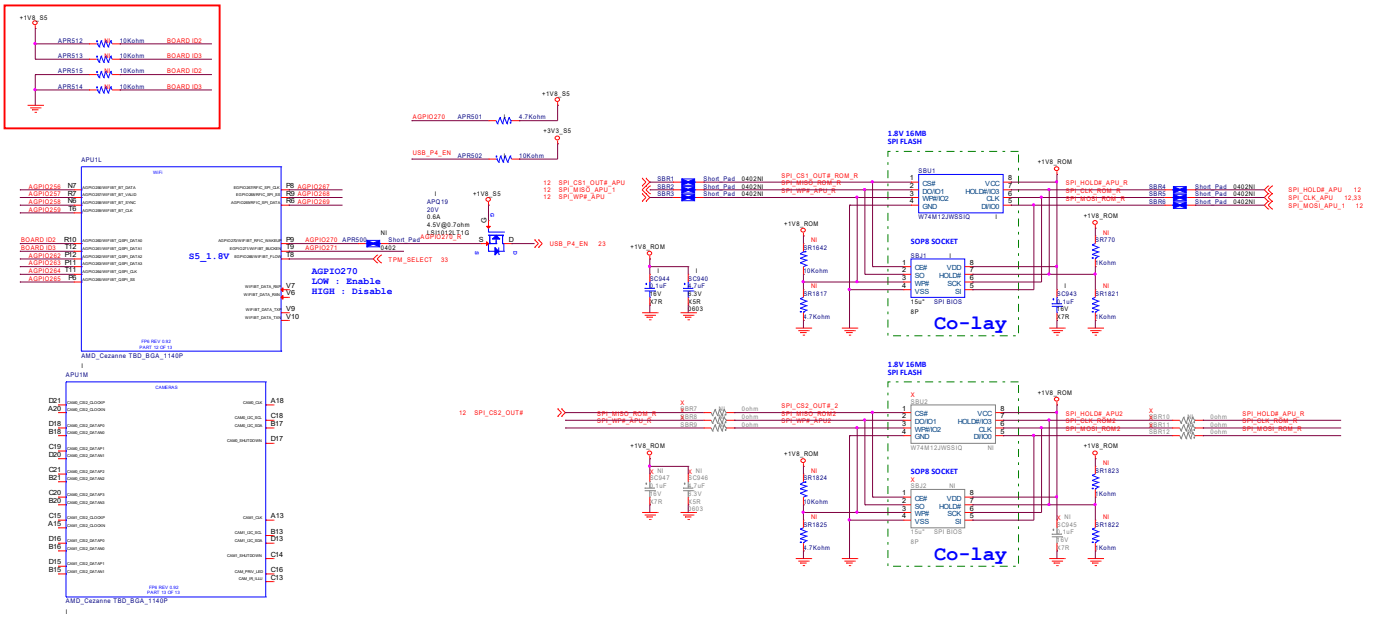

teknisi-indonesia.com

AVC	Asia Vital Components Co., Ltd.		
Title	P15 SPI ROM		
Size C	Document Number Yoga27-ACH2 AMD FP6		Rev X10
Date: Thursday, April 29, 2021		Sheet 15 of 70	

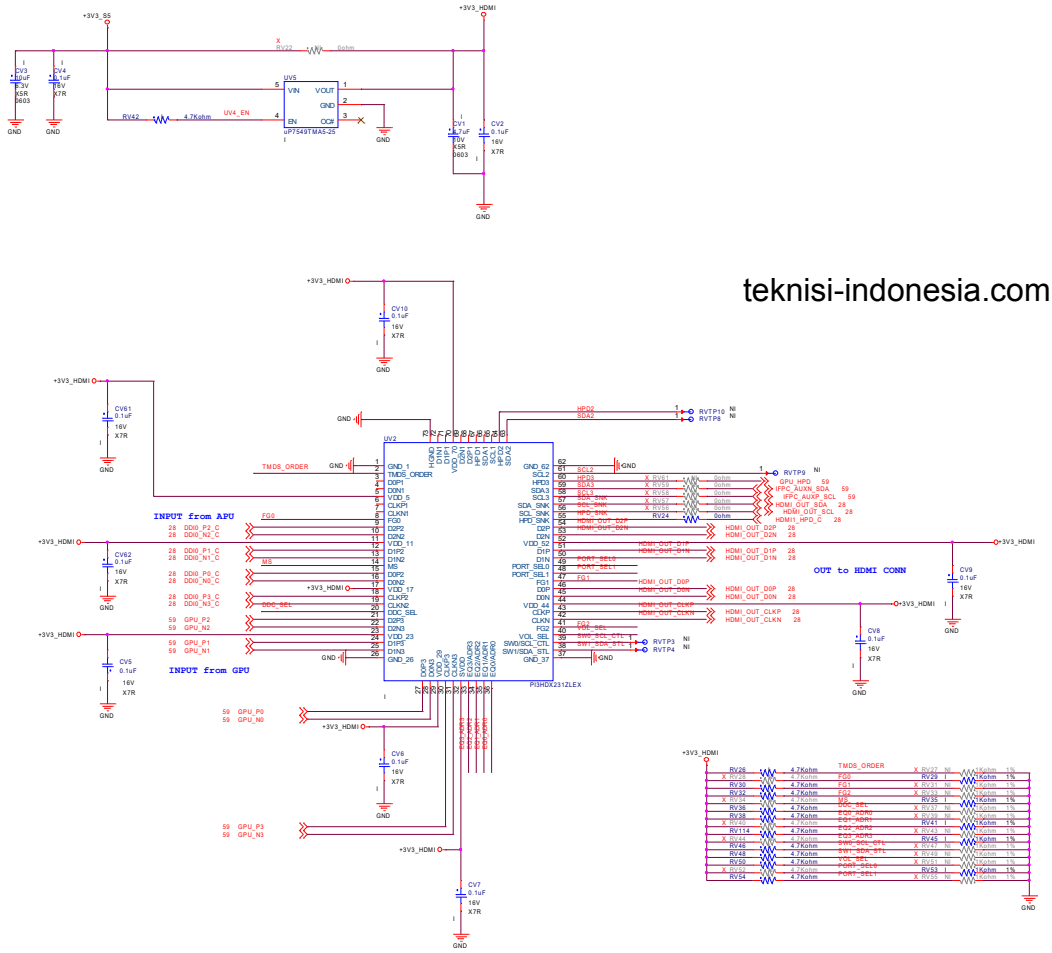

teknisi-indonesia.com

AVC	Asia Vital Components Co., Ltd.
Title	P16 HDMI REDRIVER
Size C	Document Number: Yoga27-ACH2 AMD FP6 — Rev X10
Date: Thursday, April 29, 2021	Sheet 16 of 70

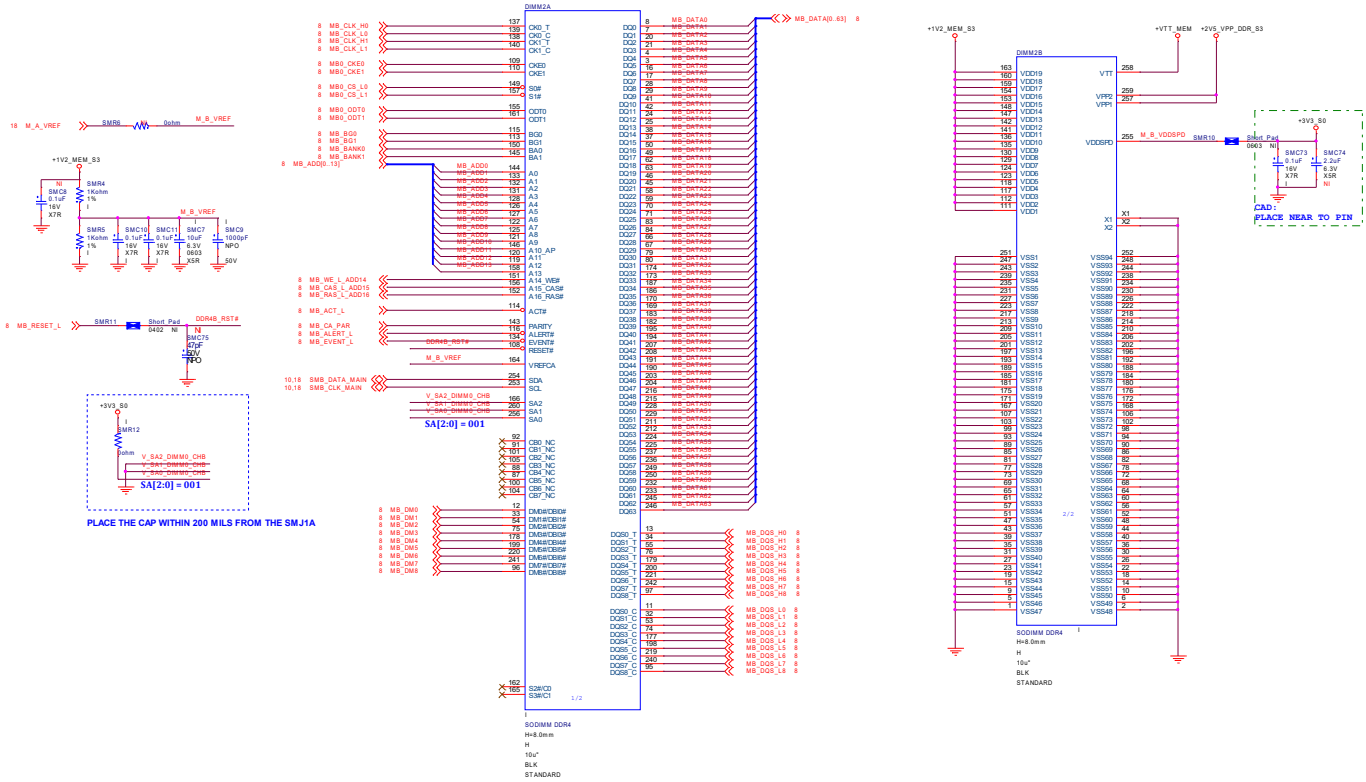

PLACE ALL COMPONENTS ON THIS PAGE CLOSE TO SODIMM

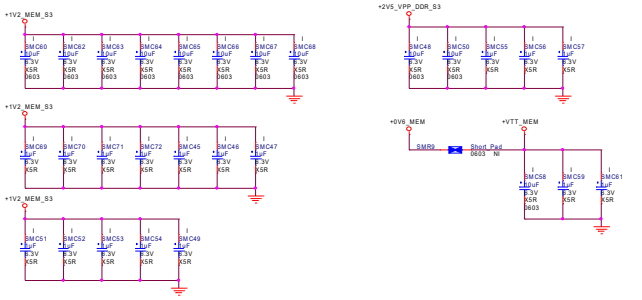

Asia Vital Components Co., Ltd.	
Title: P17 DDR4 CHB SO-DIMM2 -8H	
Size: C	Document Number: Yoga27-ACH2 AMD FP6
Rev: X10	
Date: Thursday, April 29, 2021	Sheet 17 of 70

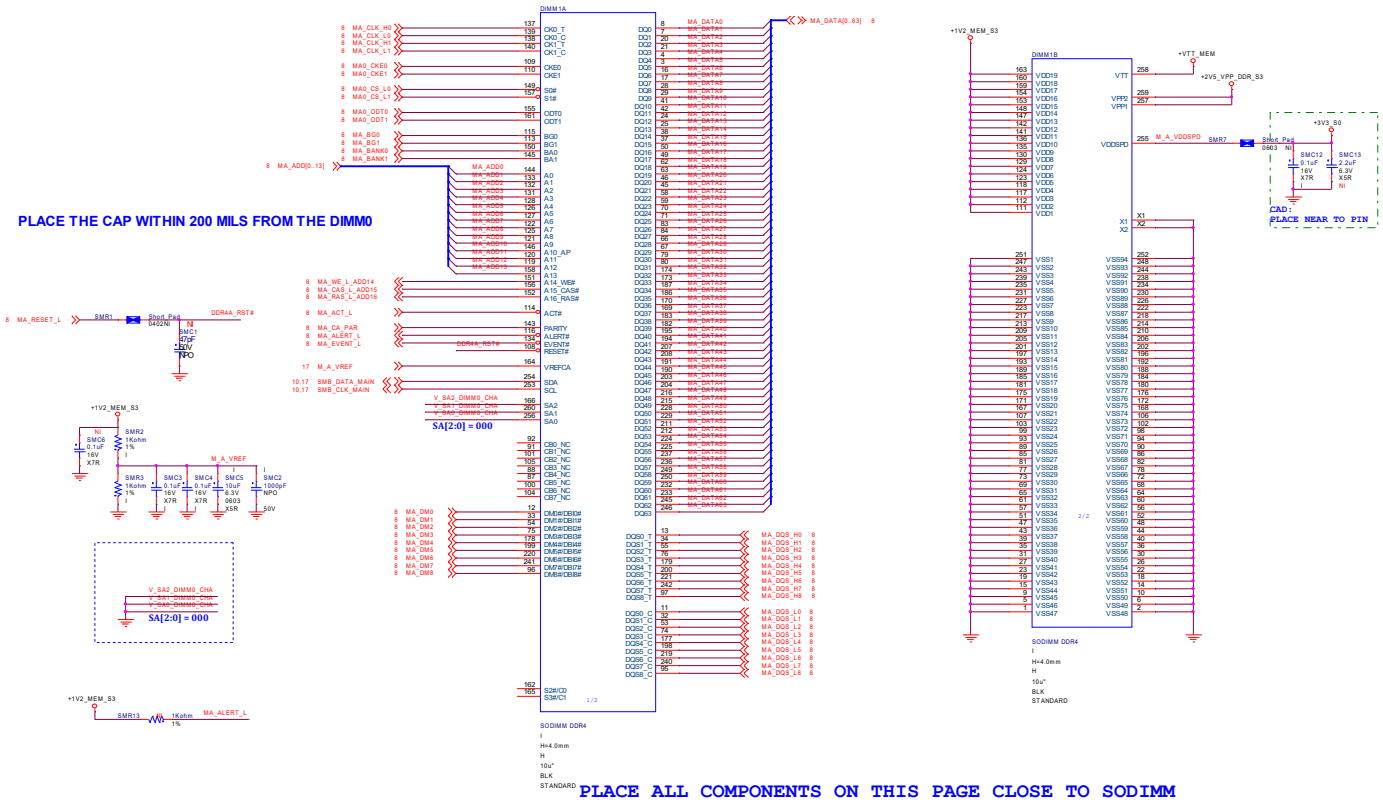

PLACE ALL COMPONENTS ON THIS PAGE CLOSE TO SODIMM

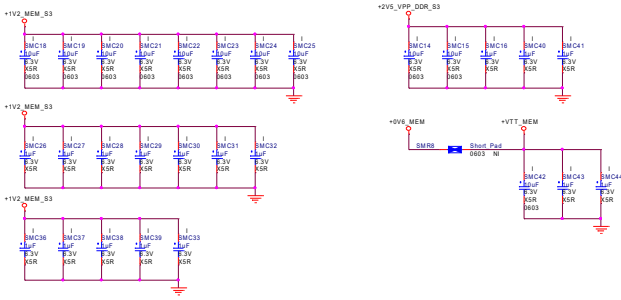

Asia Vital Components Co., Ltd.	
Title: P18 DDR4 CHA SO-DIMM1 -4H	
Size: C	Document Number: Yoga27-ACH2 AMD FP6
Rev: X10	
Date: Thursday, April 29, 2021	Sheet 18 of 70

USB2.0 Camera Redriver

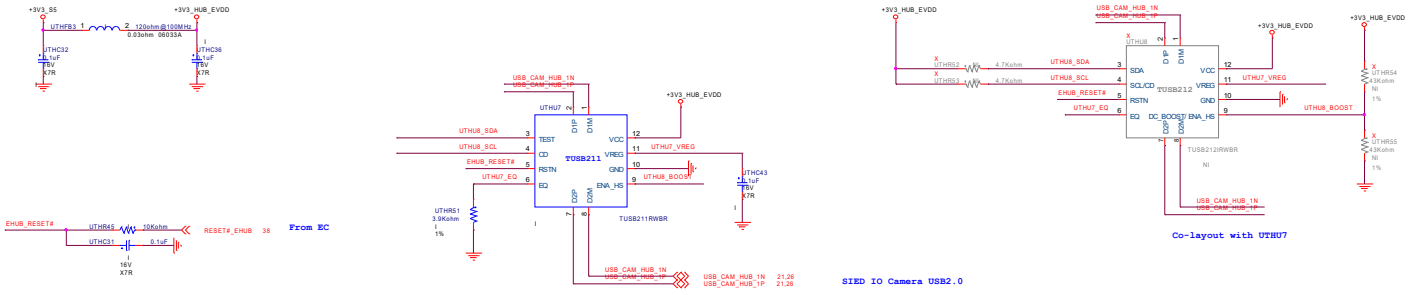

AVC Asia Vital Components Co., Ltd.			
Title: P19 USB2.0 Dedrievr / CAM_FP			
Size: C	Document Number: Yoga27-ACH2 AMD FP6		Rev: X10
Date: Thursday, April 29, 2021		Sheet 19 of 70	

VRMPWROK

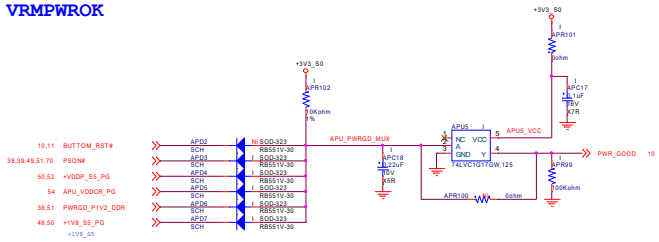

+APU_VDD_ENABLE

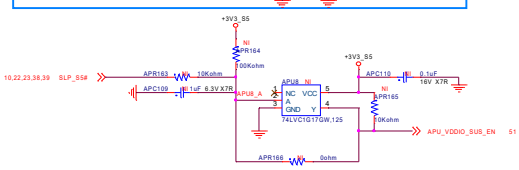

SIT

5V3V_S5_PG APR511 0ohm +VDDP_S5_EN

+VDDP_S5_EN

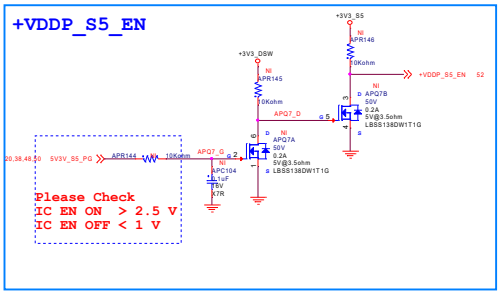

5V & 3.3V & 1.8V Bleed off circuit

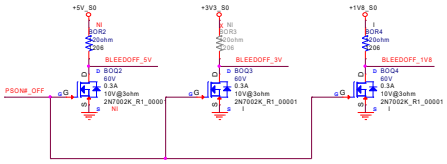

5V_S5 and 3V_S5 Bleed off circuit

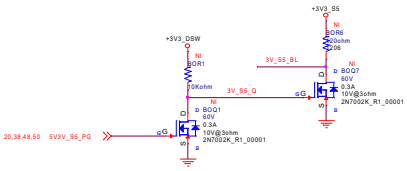

+12V Bleed off circuit

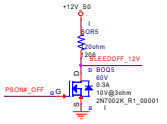

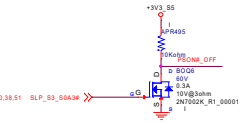

AVC Asia Vital Components Co., Ltd.			
Title: P20 PWRGD & Bleed Off			
Size: C	Document Number: Yoga27-ACH2 AMD FP6		Rev: X10
Date: Thursday, April 29, 2021	Sheet 20 of 70		

Rear USB2 x 2

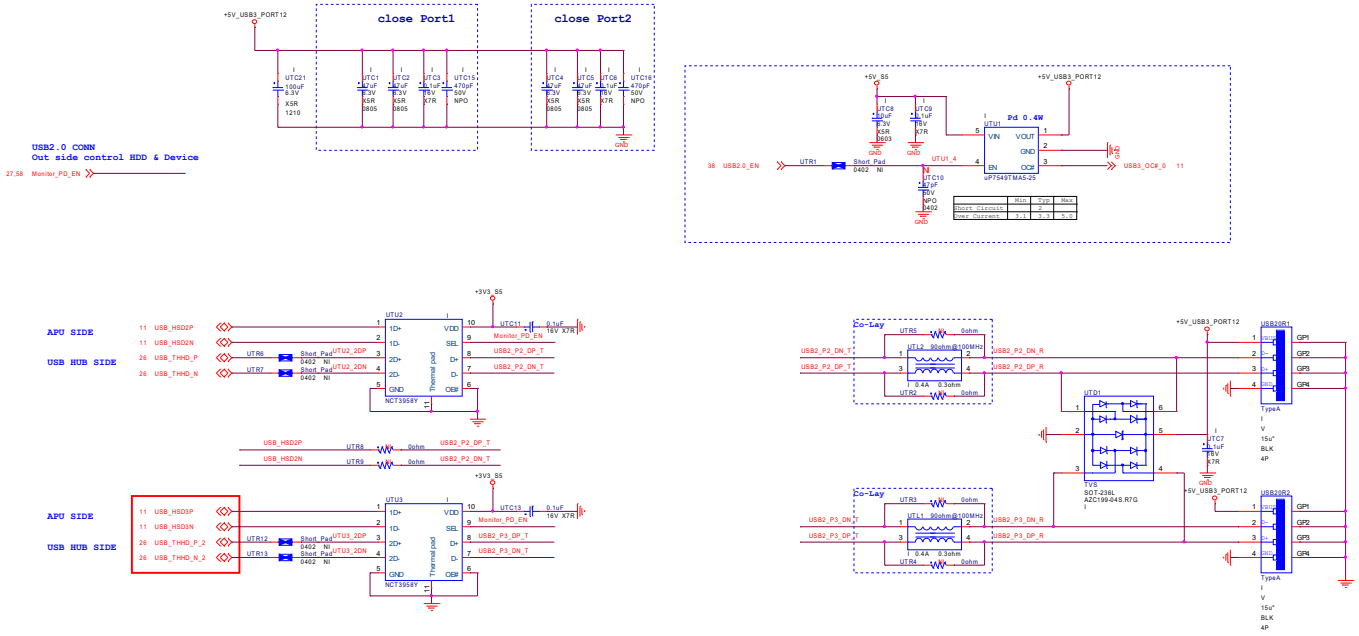

AVC	Asia Vital Components Co., Ltd.		
Title	P21 Rear IO USB2.0		
Size C	Document Number Yoga27-ACH2 AMD FP6		Rev X10
Date: Thursday, April 29, 2021		Sheet 21 of 70	

REAR IO USB Gen3.2 x 2

MAX MIL : 6000 MILS

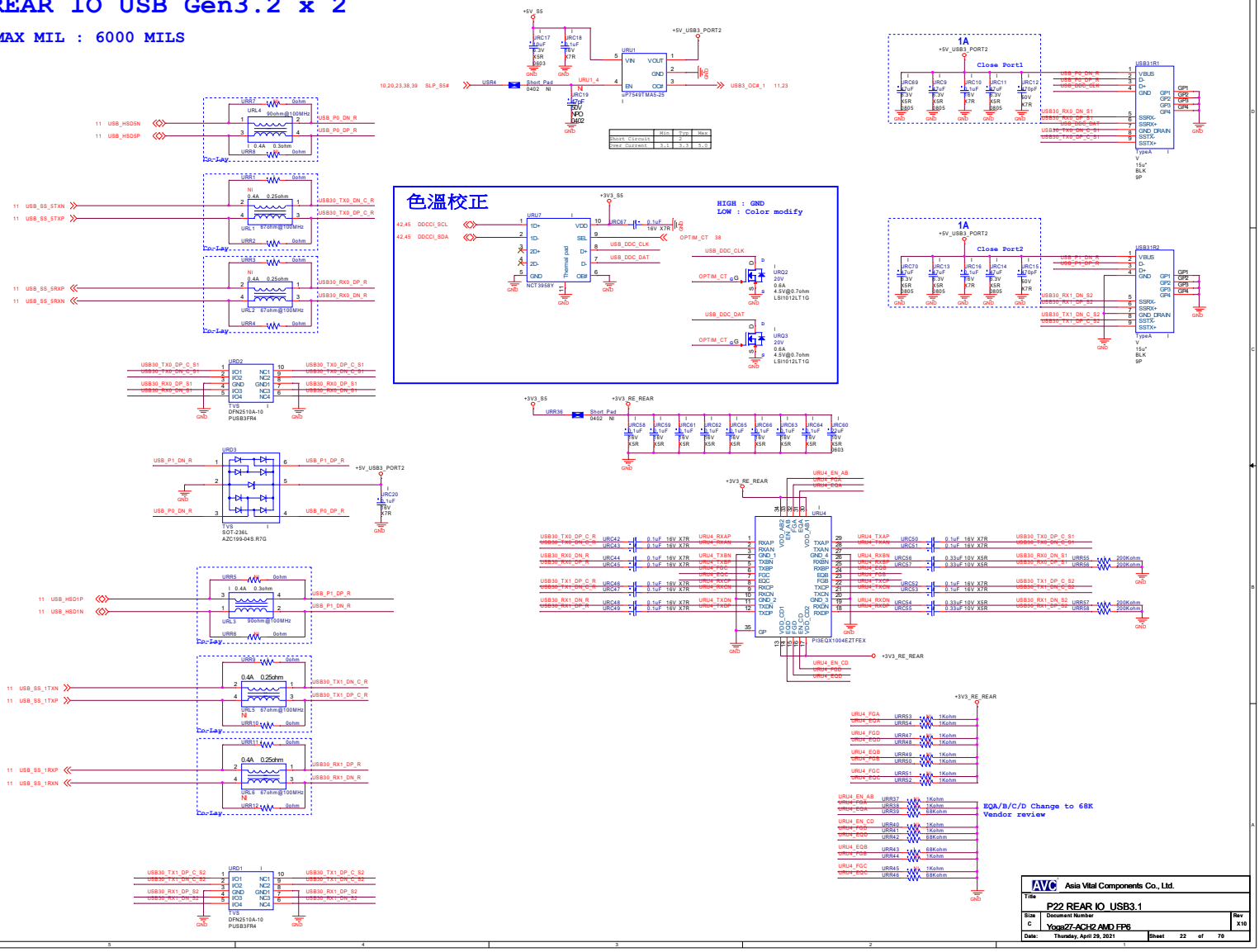

Type-A SIDE IO

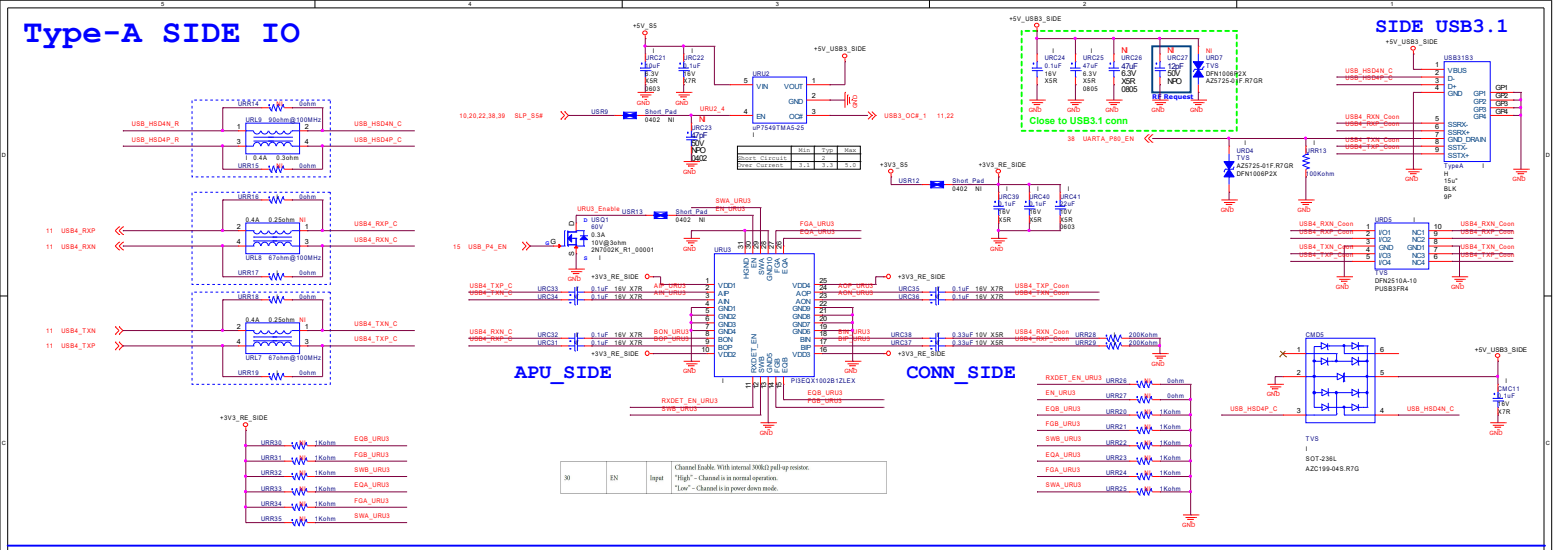

30	EN	Input	Channel Enable. With internal 300kΩ pull-up resistor. "High" - Channel is in normal operation. "Low" - Channel is in power down mode.

DMIC IO

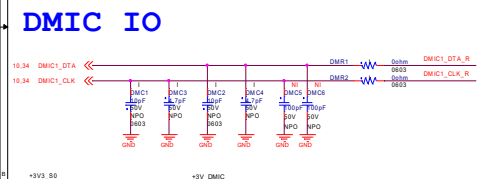

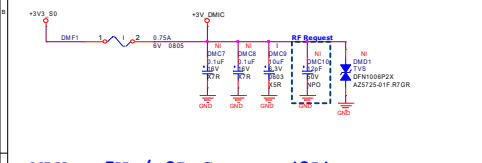

MAX : 5V / 2D_Camera (2A)

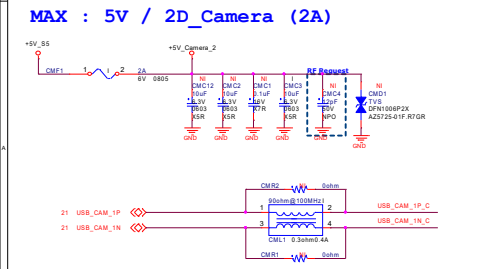

Operating conditions		
Parameter	Ratings	Units
Input Voltage	USB 3.3V(+/-250mV)	V
Power consumption	Suspend @1.5mA Operation @ 245mA	mA
Temperature range	Operation @ 0℃ ~ +70℃ Stable range @ 0℃ ~ +60℃	℃

Pin description		
Pin Number	Symbol	Function
1	MIC-DAT	DMIC DATA
2	MIC-CLK	DMIC CLK
3	Vcc_3.3V	USB 3.3V input
4	GND	Camera GND

0.5A

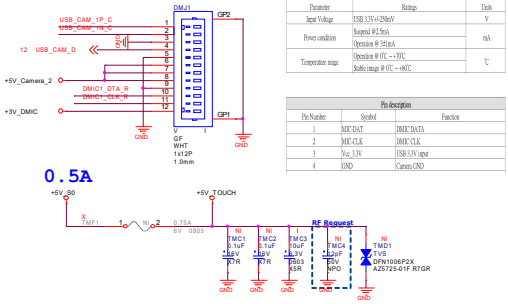

80 PORT

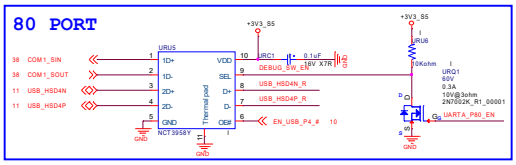

TOUCH

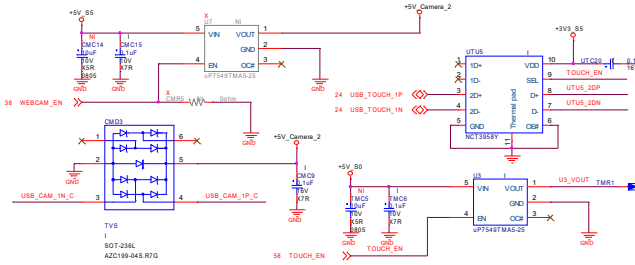

Asia Vital Components Co., Ltd.			
Title	P23 WEBCAM / SIDE USB3.1 / TOUCH		
Size C	Document Number Yoga27-ACH2 AMD FP6		Rev X10
Date: Thursday, April 29, 2021	Sheet 23 of 70		

USB2.0 (Touch + 無線投屏) HUB

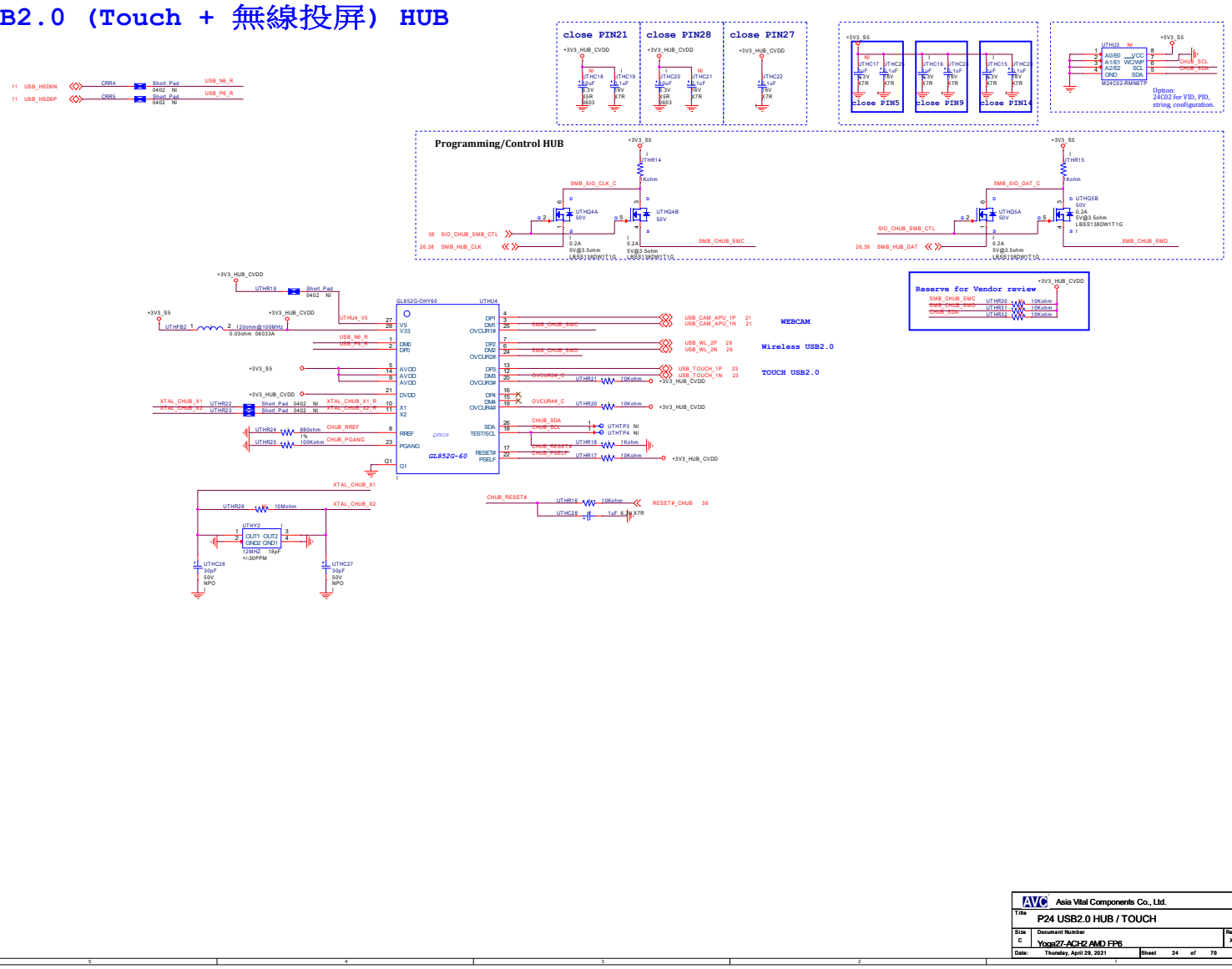

Asia Vital Components Co., Ltd.	
Title	P24 USB2.0 HUB / TOUCH
Size C	Document Number: Yoga27-ACH2 AMD FP6 — Rev X10
Date: Thursday, April 29, 2021	Sheet 24 of 70

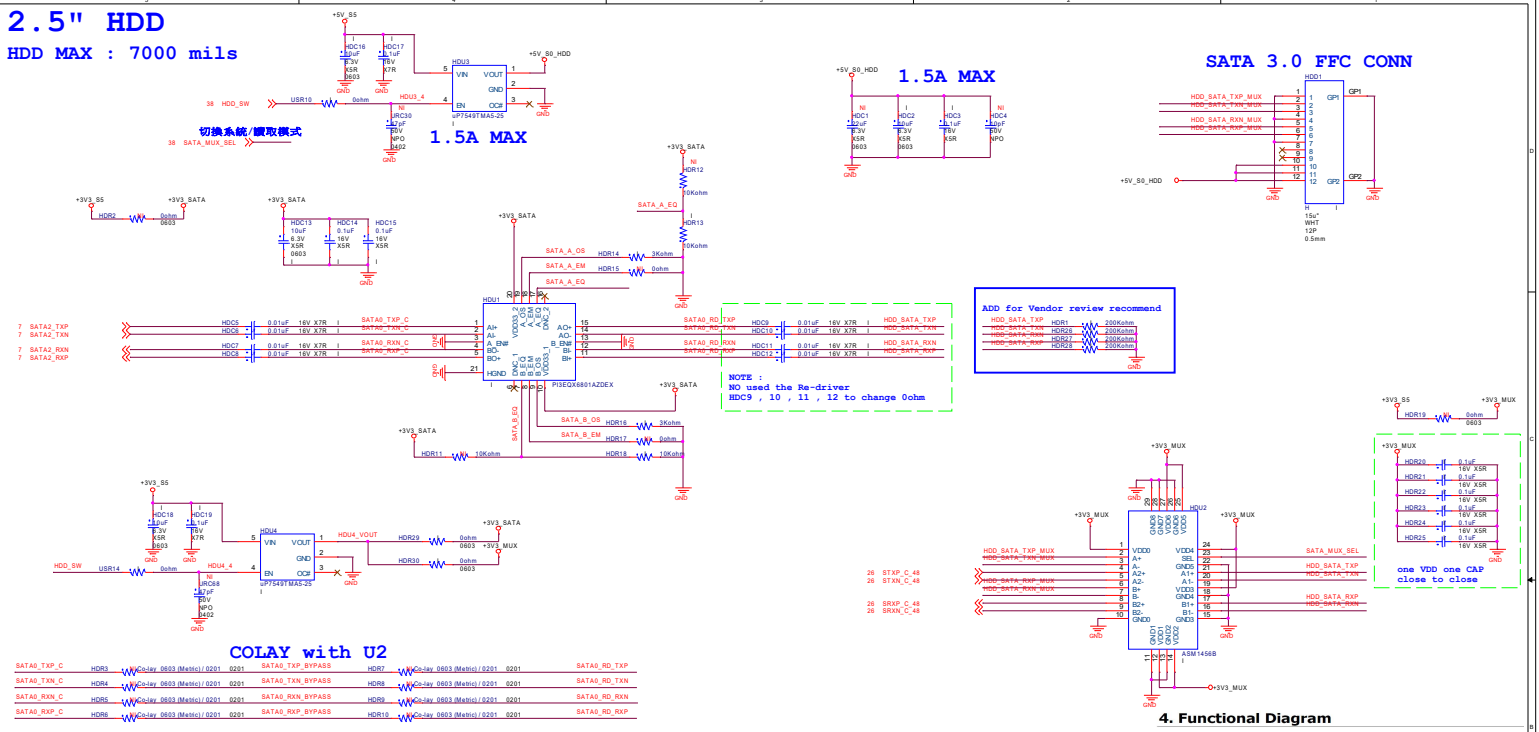

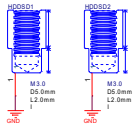

4. Functional Diagram

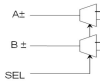

Figure 1: Functional Diagram of ASM1456B

4.1 Truth Table

SEL	Descriptions
L	(A±, B±) to (A1±, B1±)
H	(A±, B±) to (A2±, B2±)

Receive Equalizer Configuration Table

x_EN#	x_EQ	Input Equalization @ 3.0GHz	Function
1	X	N/A	Channel x disabled. Hi-impedance terminations
0	0	8dB	Channel enabled, medium input equalization
0	1	16dB	Channel enabled, high input equalization
0	$V_{DD}/2$	4dB (Default)	Channel enabled, low input equalization

Output Swing Adjustment (1)

R[A:B]_OS (Ω)	Output Swing, mV ($V_{TX-DIFF-P}$)(2) 3Gbps	6Gbps
5.5K	450	600
5K	490	660
4.5K	540	730
4K	600	820
3.5K	670	910
3K	760	1,000
2.5K	870	1,080
2K	990	1,200

Note:
1. Suggested initial test values. Exact resistor values will vary depending on PCB design.
2. Auto HDD Rate Detection is ON.

Output Emphasis Adjustment (1, 2)

R[A:B]_EM (Ω)	Pre-emphasis
Do Not Connect	0dB
14K	+2.0dB
10K	+3.0dB
6K	+4.0dB
2K	+6.0dB

Note:
1. Suggested initial test values. Exact resistor values will vary depending on PCB design.
2. Referenced to output saving of 600mV, will vary as a function of swing, increasing as swing decreases.

Note:
V_{MAX} of output can not exceed 1,200mVppd (i.e. $V_{DIFF-PRE}$ can not exceed 1,200mV)

teknisi-indonesia.com

Asia Vital Components Co., Ltd.	
Title: P25 SATA HDD / MUX	
Size: C	Document Number: Yoga27-ACH2 AMD FP6 — Rev: X10
Date: Thursday, April 29, 2021	Sheet 25 of 70

USB2.0 HUB

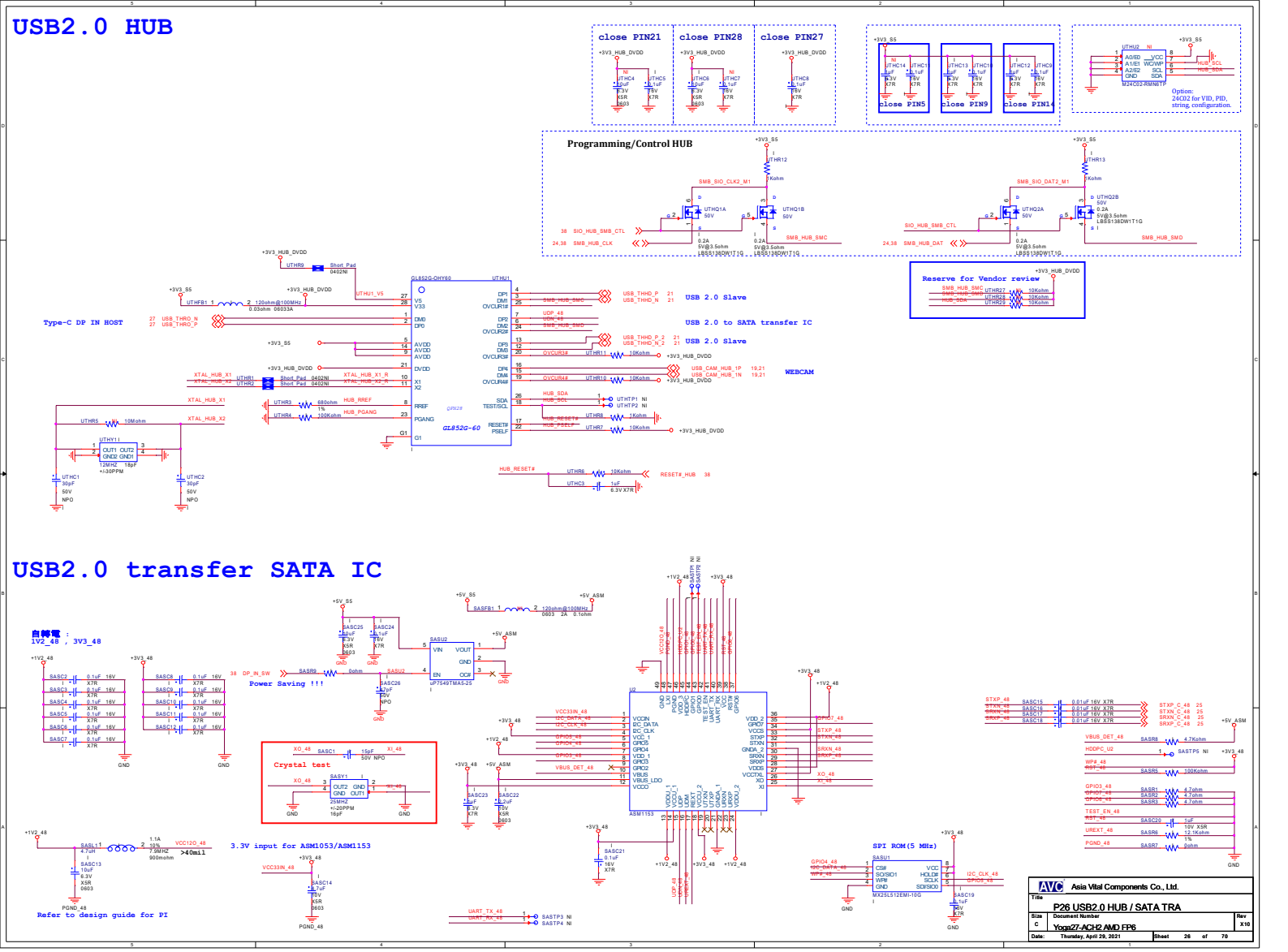

USB2.0 transfer SATA IC

Asia Vital Components Co., Ltd.

Title	P26 USB2.0 HUB / SATA TRA	
Size C	Document Number Yoga27-ACH2 AMD FP6	Rev X10
Date: Thursday, April 29, 2021	Sheet 26 of 70	

DP IN Type-c

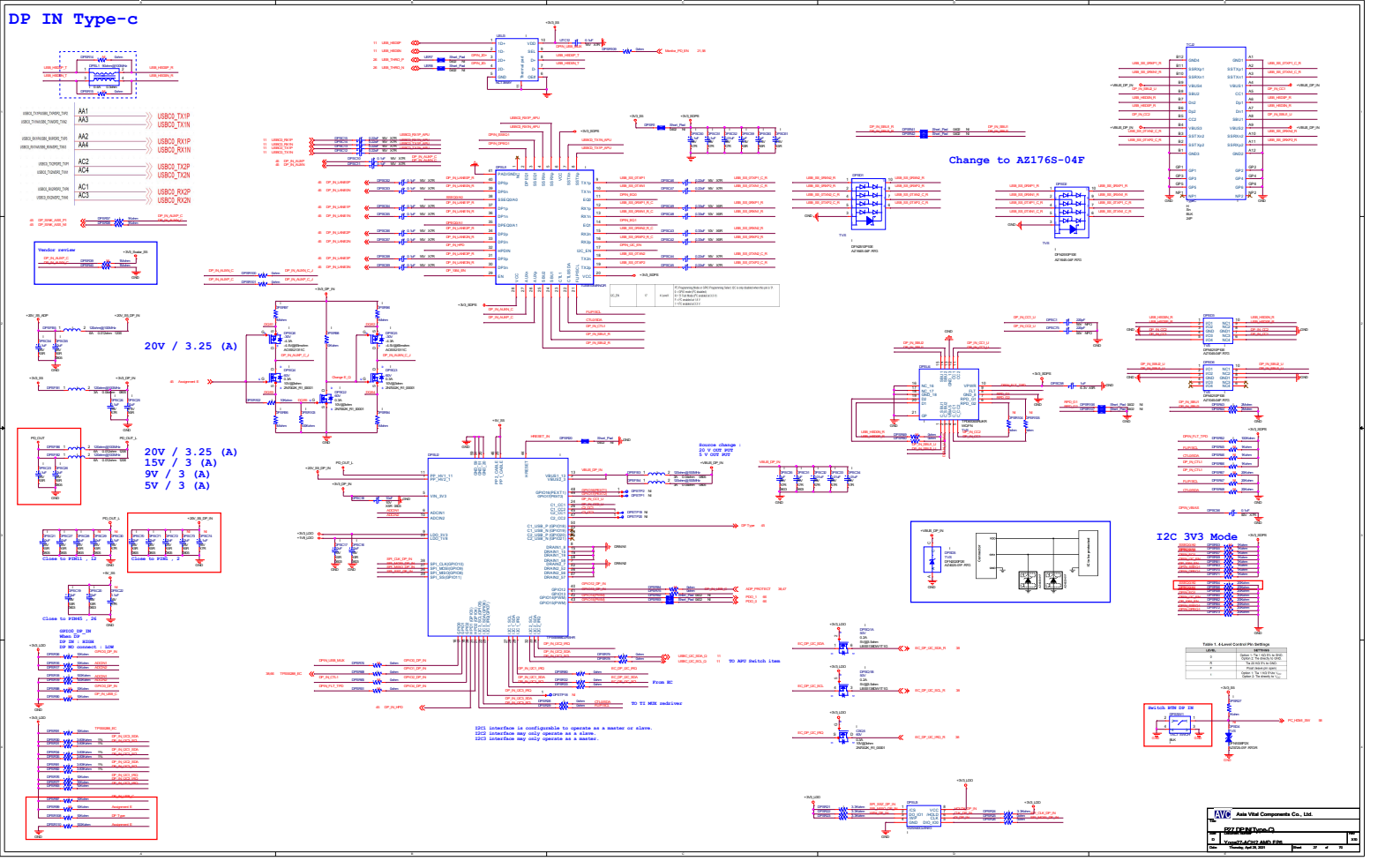
Change to AZ176S-04F
20V / 3.25 (A)
20V / 3.25 (A)
15V / 3 (A)
9V / 3 (A)
5V / 3 (A)
Source change
5 V OCP 3V2
5 V OCP 3V2
I2C 3V3 Mode
Vendor review
Close to PIN11 , 12
Close to PIN1 , 2
Close to PIN45 , 26
GPIO0_DP_IN
DP IN 3 ACON
DP IN 2 ACON
DP NO connect : 32M
TO AP0 Switch Iten
From BC
TO TI MUX redriver
I2C1 interface is configurable to operate as a master or slave.
I2C2 interface may only operate as a slave.
I2C3 interface may only operate as a master.
Switch HPM DP IN
Asia Vital Components Co., Ltd.
P27 DP IN Type-C
Y-sys42_AC42_AMD_F.IN
Thursday, April 29, 2021

HDMI 2.0 OUT

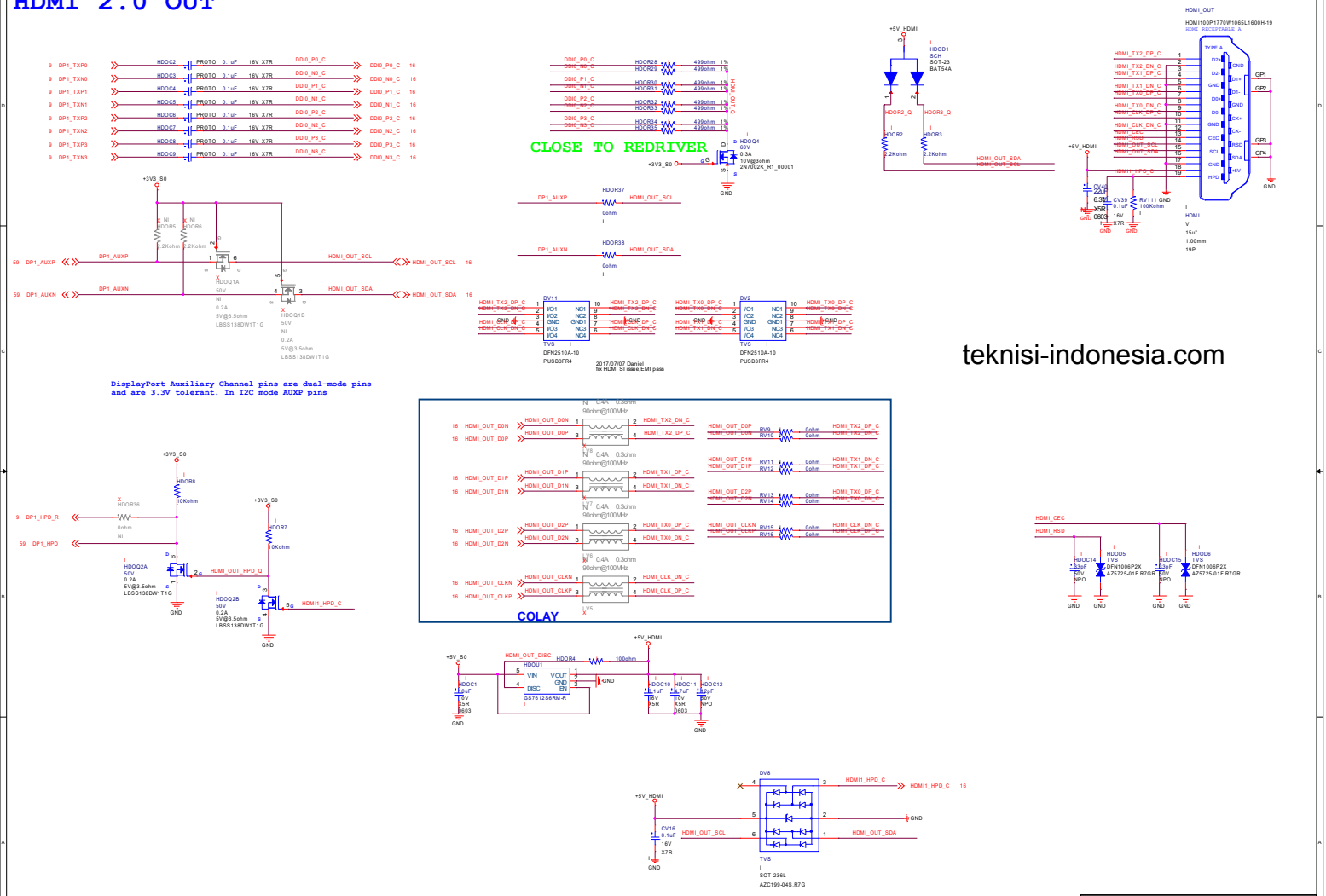

teknisi-indonesia.com

AVC	Asia Vital Components Co., Ltd.
Title	P28 HDMI 2.0 OUT
Size C	Document Number: Yoga27-ACH2 AMD FP6
Rev	X10
Date:	Thursday, April 29, 2021
Sheet	28 of 70

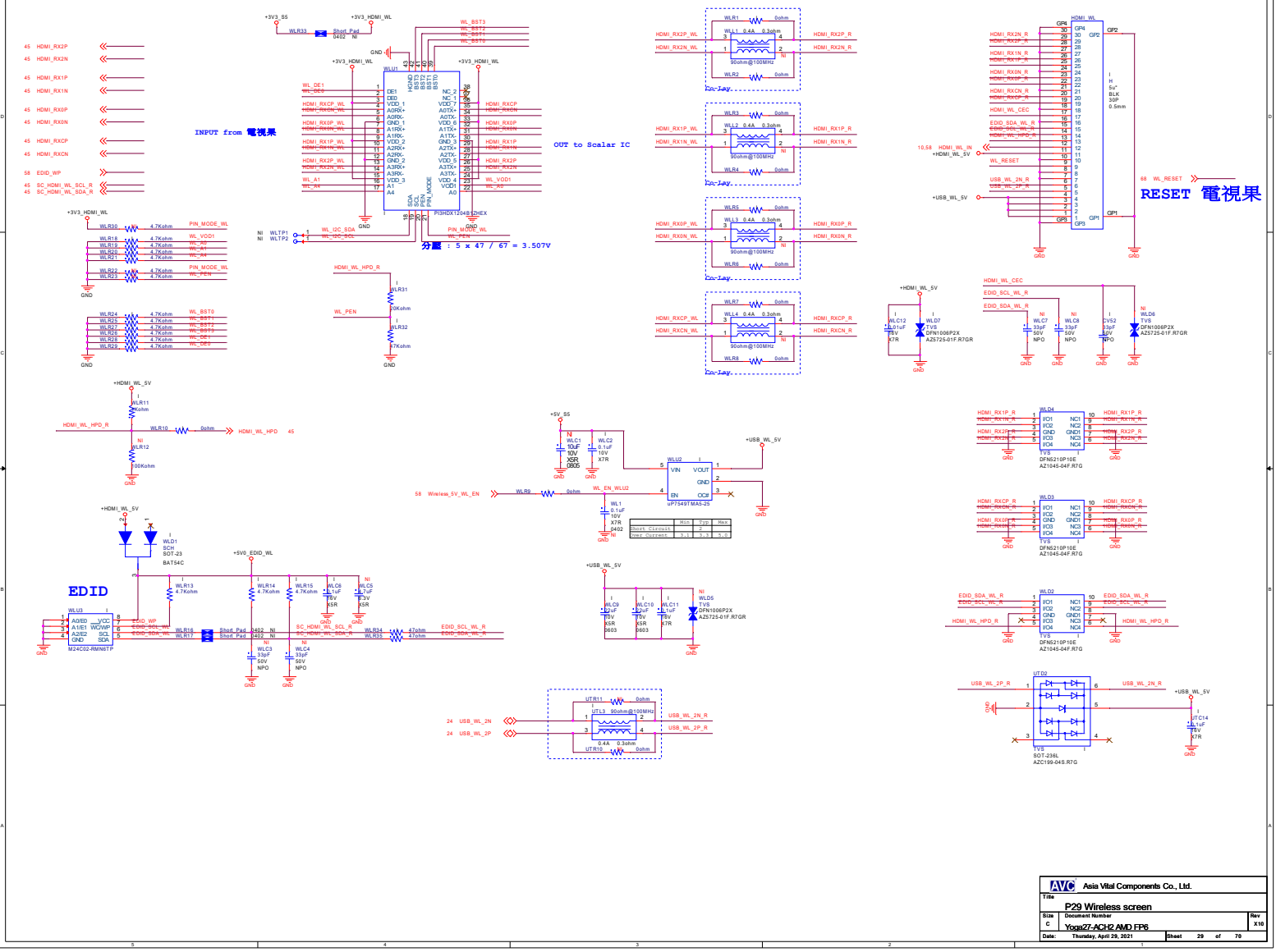
INPUT from 電視果
OUT to Scalar IC
分壓 : 5 x 47 / 67 = 3.507V
RESET 電視果
EDID
PI3HDX1204BZHEX
M24C02-RMN6TP
UP7549TMAS-25
DFN1006P2X
AZ5725-01F.R7GR
DFN6210P10E
AZ1045-04F.R7G
SOT-236L
AZC199-04S.R7G
SOT-23
BAT54C
Short_Pad
0402
Short Circuit
Open Circuit
Min
Typ
Max
Asia Vital Components Co., Ltd.
Title
P29 Wireless screen
Size
C
Document Number
Yoga27-ACH2 AMD FP6
Rev
X10
Date:
Thursday, April 29, 2021
Sheet
29
of
70

M.2 SSD PCIE x 4

M.2 2242/ 280

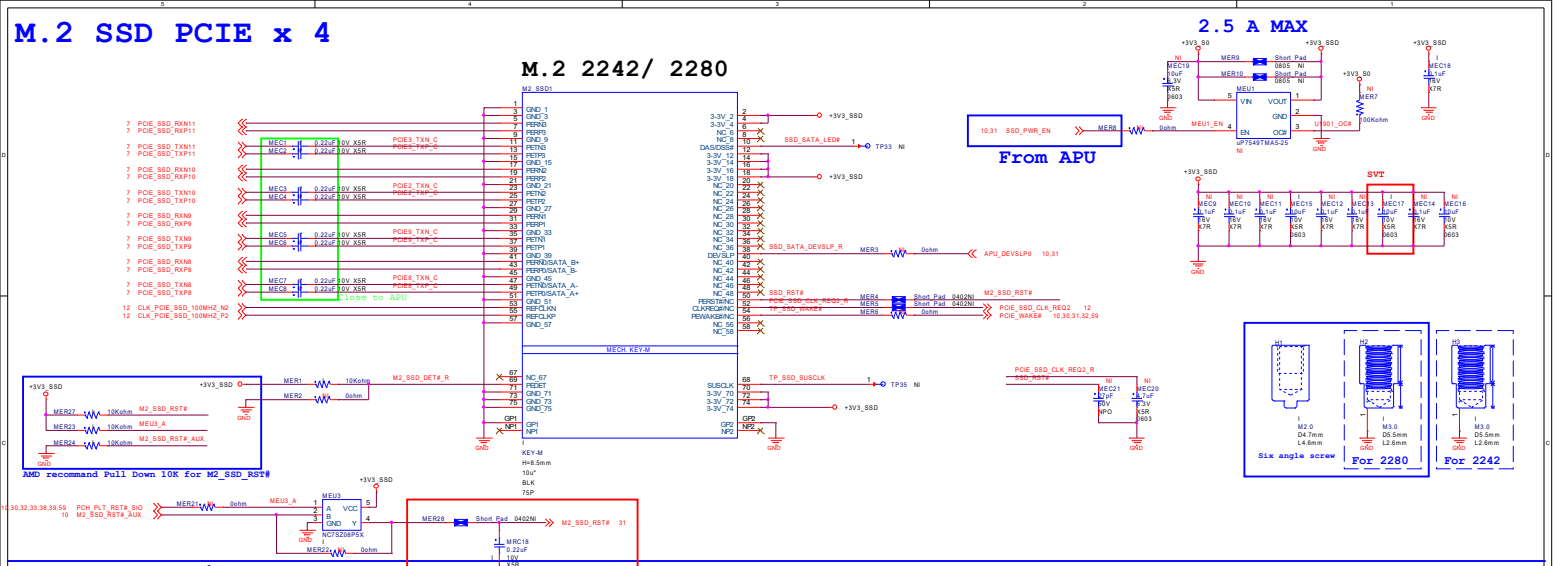

M.2 WIFI / BT

WLAN
M.2 2230 Key-E

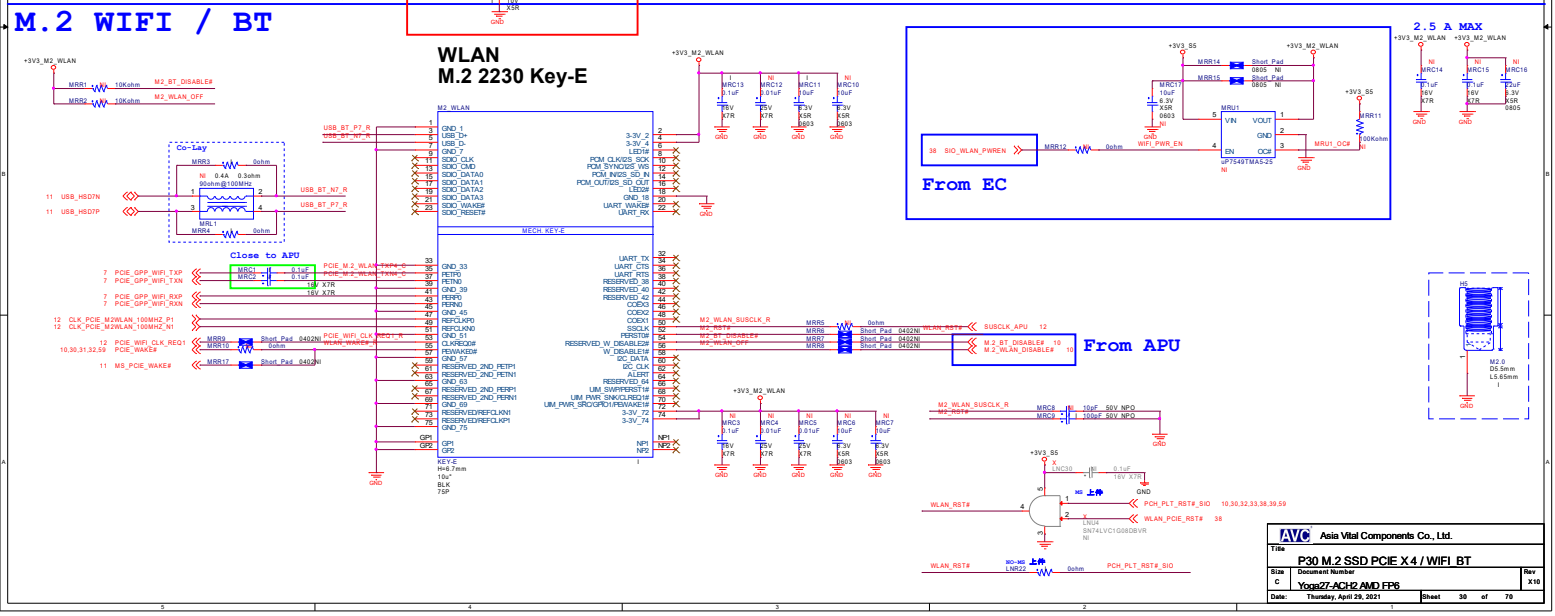

Asia Vital Components Co., Ltd.

Title	P30 M.2 SSD PCIE X 4 / WIFI_BT	
Size C	Document Number Yoga27-ACH2 AMD FP6	Rev X10
Date: Thursday, April 29, 2021	Sheet 30 of 70	

M.2 SSD PCIE x 4

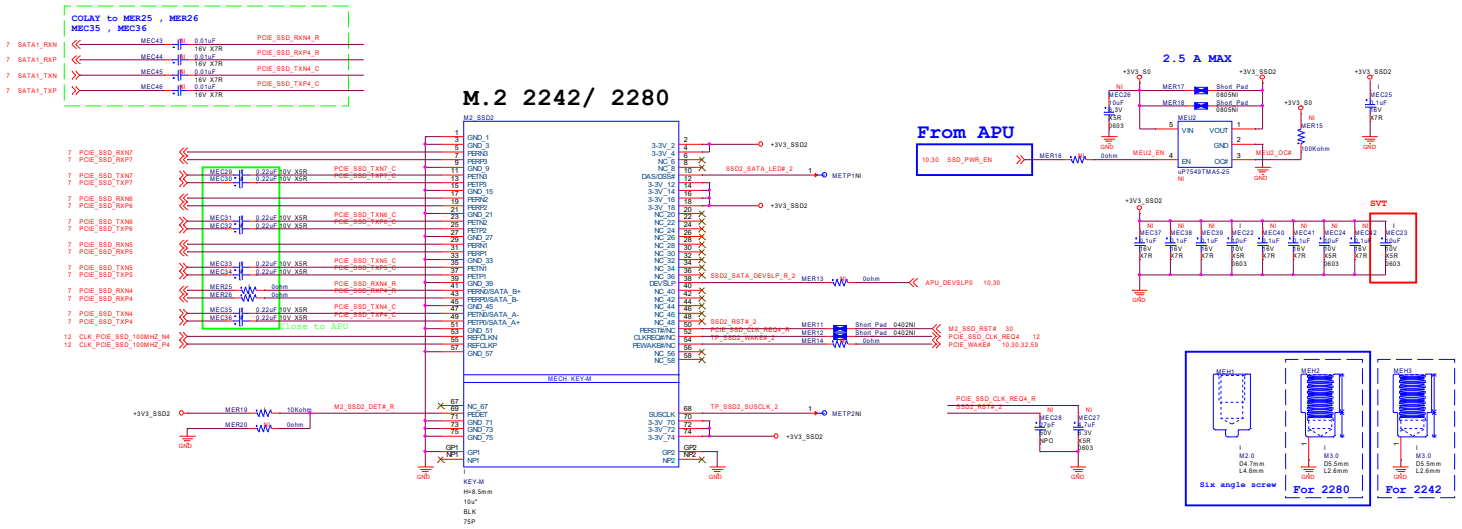

Asia Vital Components Co., Ltd.	
Title	P31 M.2 SSD CONN2
Size C	Document Number Yoga27-ACH2 AMD FP6
Rev	X10
Date: Thursday, April 29, 2021	Sheet 31 of 70

LAN RTL8111H/ RJ45 CONN

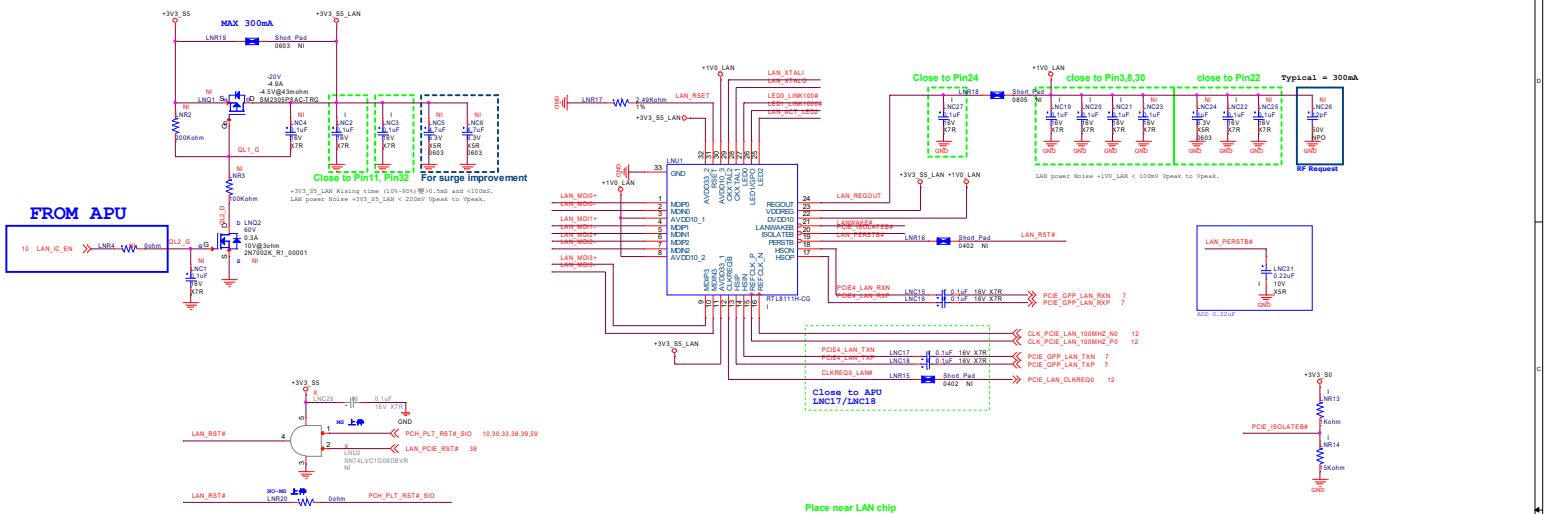

WOL	status	Yellow
don't care	No Link	off
off(ME WOL and Host WOL should be disable both)	S3/S4/S5	off
on	10M,inactive	
on	10M,active	
on	100M,inactive	
on	100M,active	
on	1G,inactive	
on	1G,active	

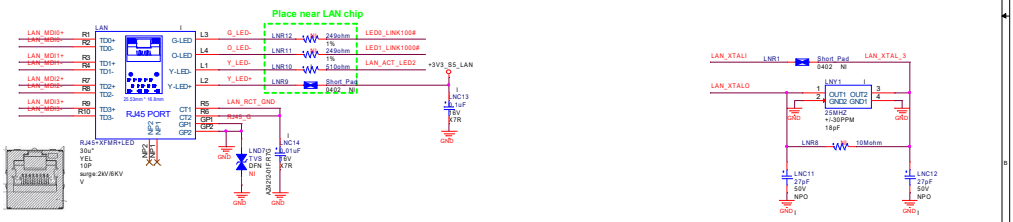

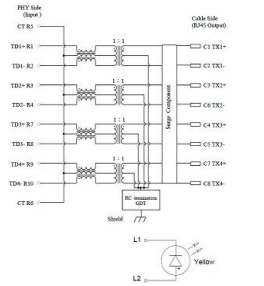

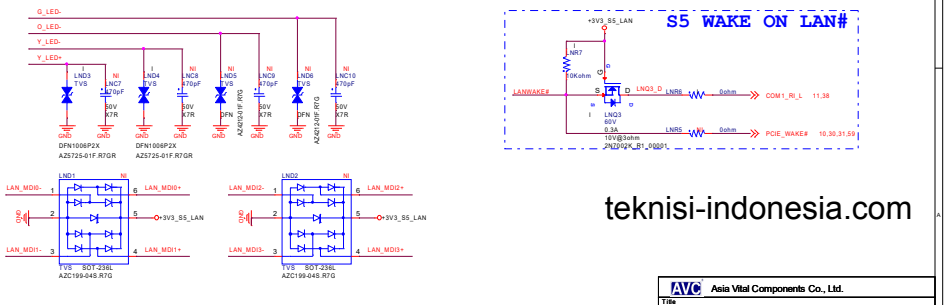

teknisi-indonesia.com

Asia Vital Components Co., Ltd.	
Title: P32 LAN RTL8111H	
Size: C	Document Number: Yoga27-ACH2 AMD FP6 — Rev: X10
Date: Thursday, April 29, 2021	Sheet 32 of 70

TPM 2.0

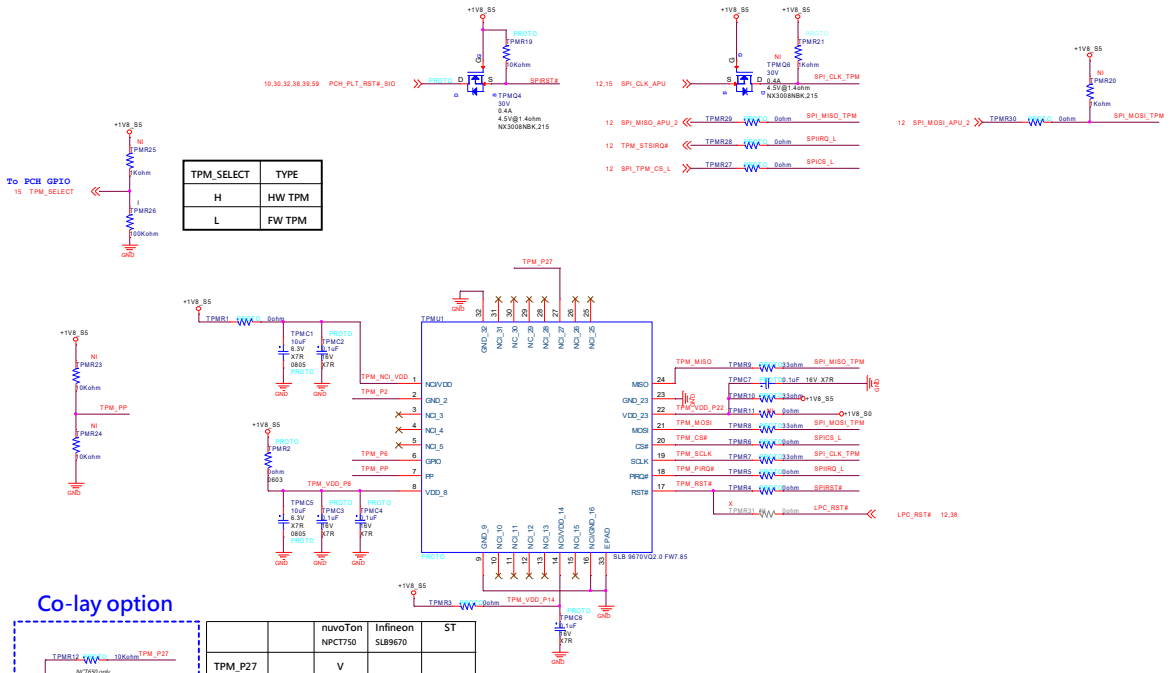

TPM_SELECT	TYPE
H	HW TPM
L	FW TPM

Co-lay option

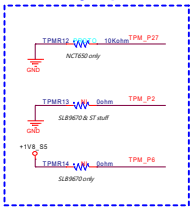

		nuvoTon NPCT750	Infineon SLB9670	ST
TPM_P27		V		
TPM_P2			V	V
TPM_P6			V	

AVC	Asia Vital Components Co., Ltd.
Title	P33 TPM2.0
Size C	Document Number: Yoga27-ACH2 AMD FP6
Rev	X10
Date:	Thursday, April 29, 2021
Sheet	33 of 70

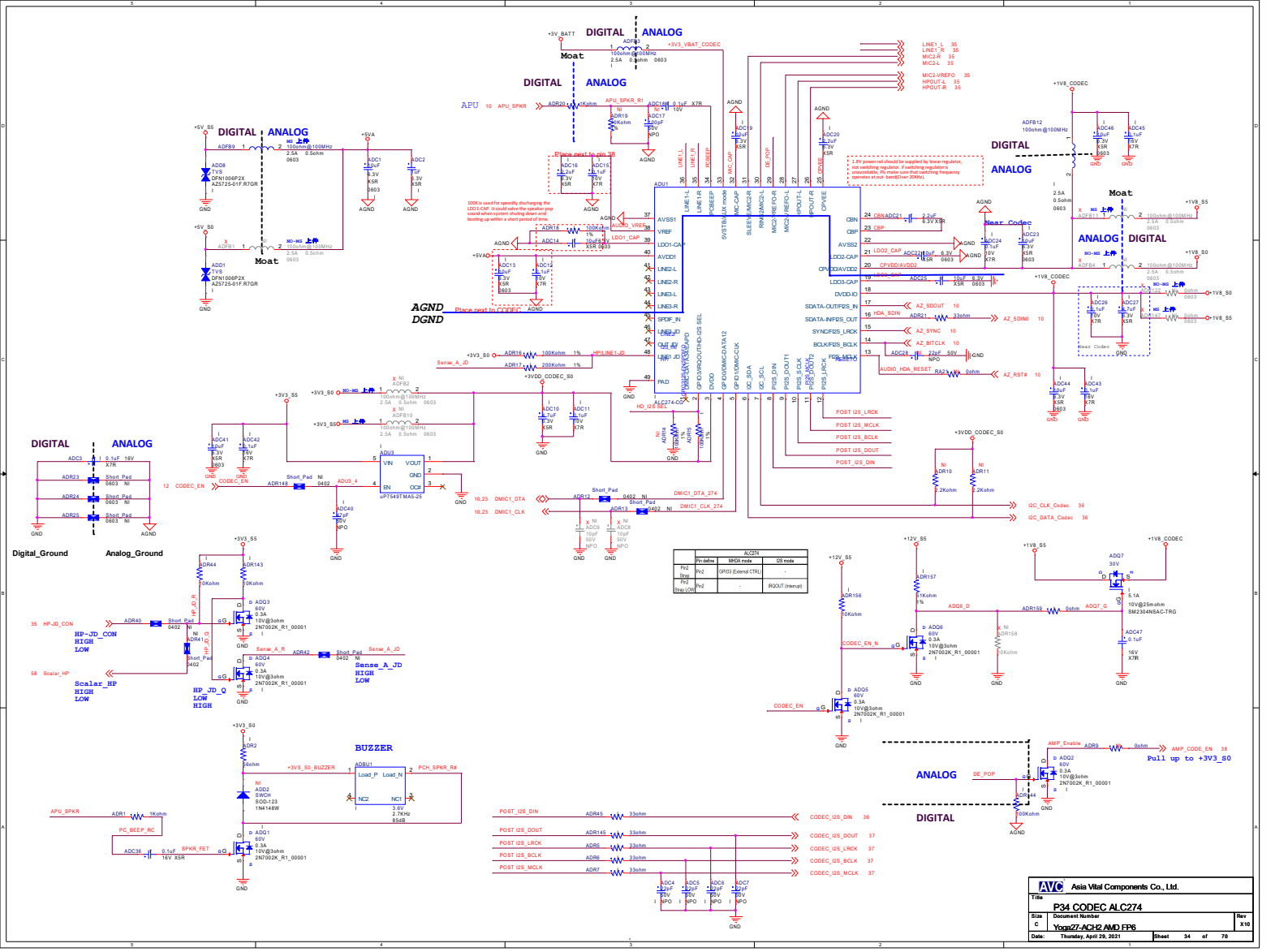

	Pin define	MHDA mode	I2S mode
Pin2 Strap	Pin2	GPIO3 (External CTRL)	-
Pin2 Strap LOW	Pin2	-	IRQOUT (Interrupt)

Asia Vital Components Co., Ltd.

Title	P34 CODEC ALC274
Size C	Document Number Yoga27-ACH2 AMD FP6
Rev	X10
Date: Thursday, April 29, 2021	Sheet 34 of 70

AUDIO COMBO JACK (MIC+HEADPHONE)

(ALC223VB supported iPhone/Nokia headset, Headphone)

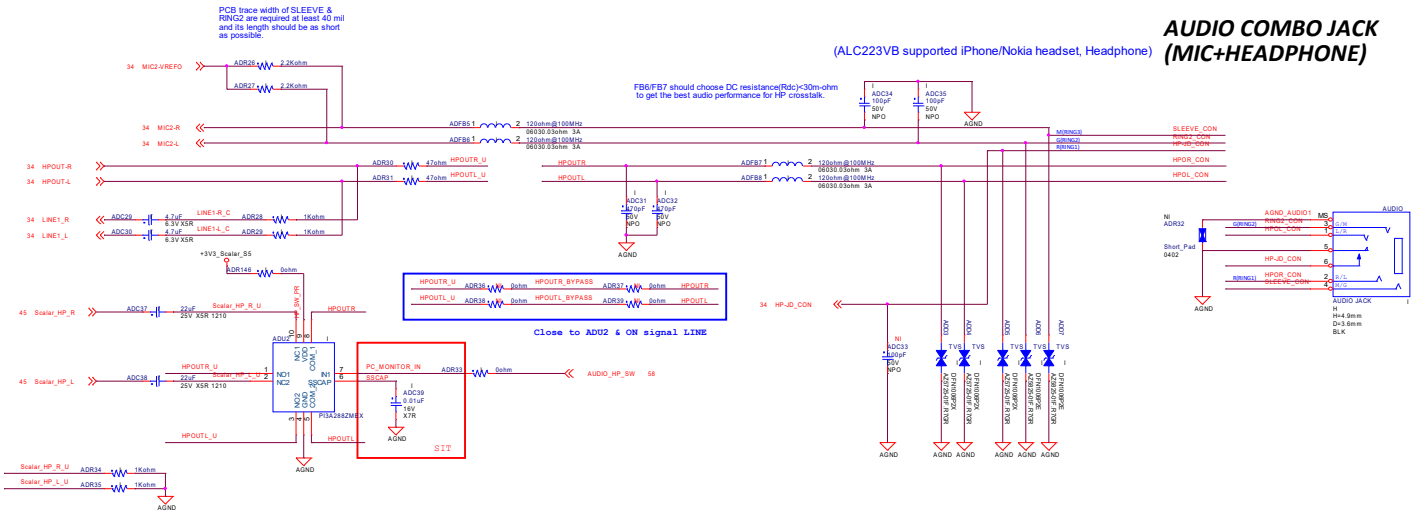

Asia Vital Components Co., Ltd.			
Title: P35 Audio JACK			
Size: C	Document Number: Yoga27-ACH2 AMD FP6		Rev: X10
Date: Thursday, April 29, 2021	Sheet 35 of 70		

AMP TAS5825MRHBR

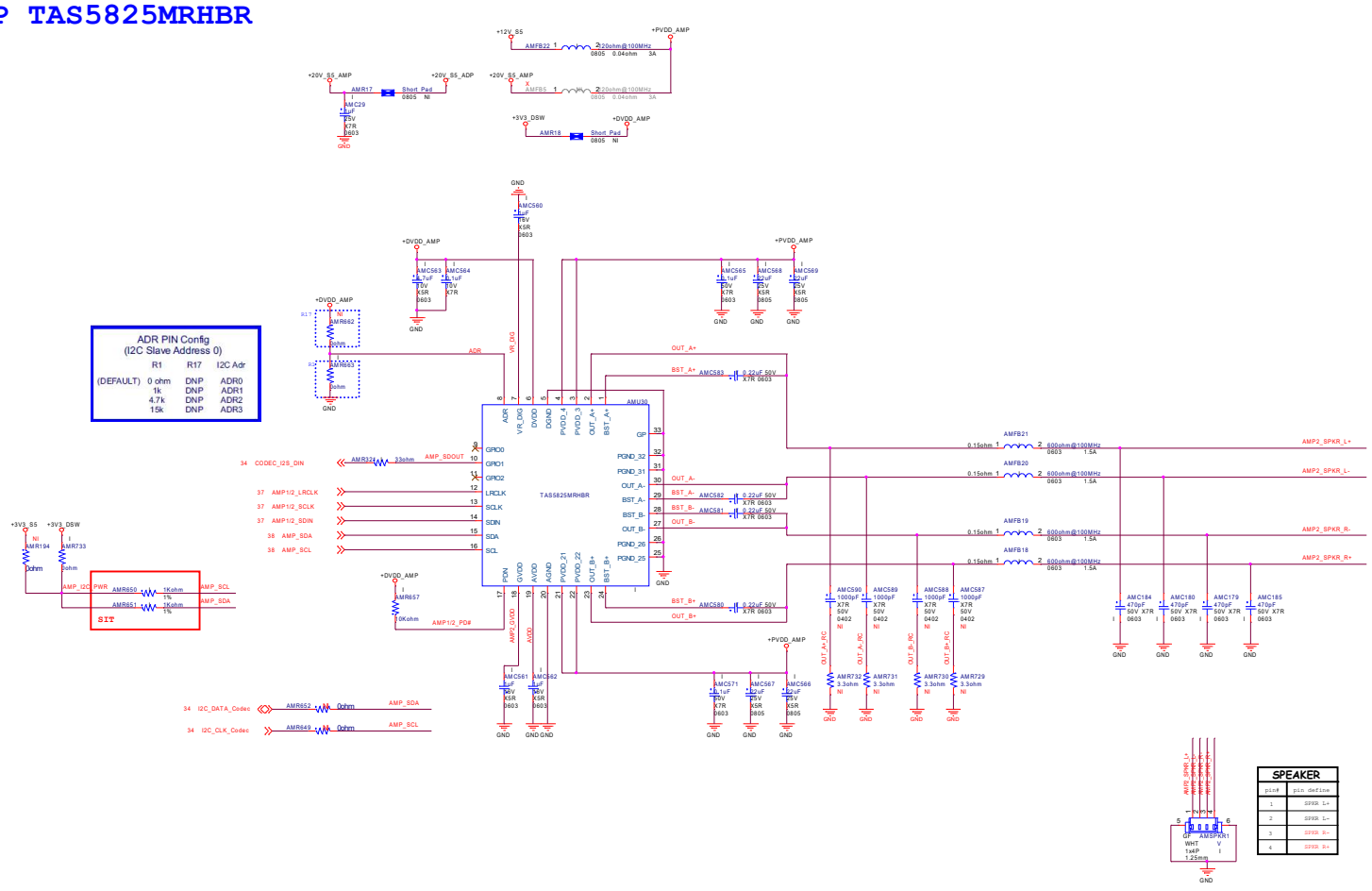

AVC	Asia Vital Components Co., Ltd.
Title	P36 AMP TAS5825MRHBR
Size C	Document Number: Yoga27-ACH2 AMD FP6 — Rev X10
Date: Thursday, April 29, 2021	Sheet 36 of 70

CODEC & SCALAR I2S MUX

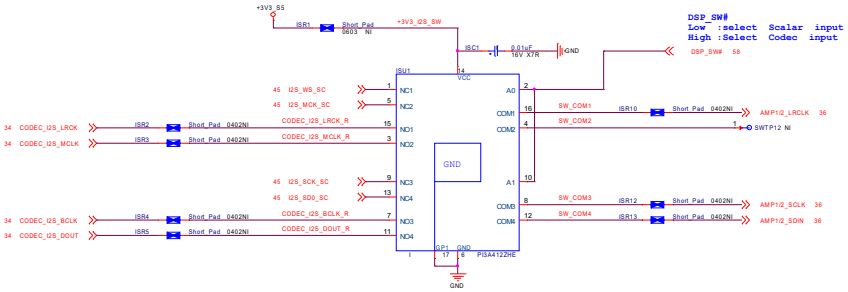

A0	Function	A1	Function
0	NC_X Connected to COM_X	0	NC_Y Connected to COM_Y
1	NO_X Connected to COM_X	1	NO_Y Connected to COM_Y

Notes:
1. X = 1 or 2
2. Y = 3 or 4

Asia Vital Components Co., Ltd.			
Title: P37 I2S Switch			
Size: C	Document Number: Yoga27-ACH2 AMD FP6		Rev: X10
Date: Thursday, April 29, 2021	Sheet 37 of 70		

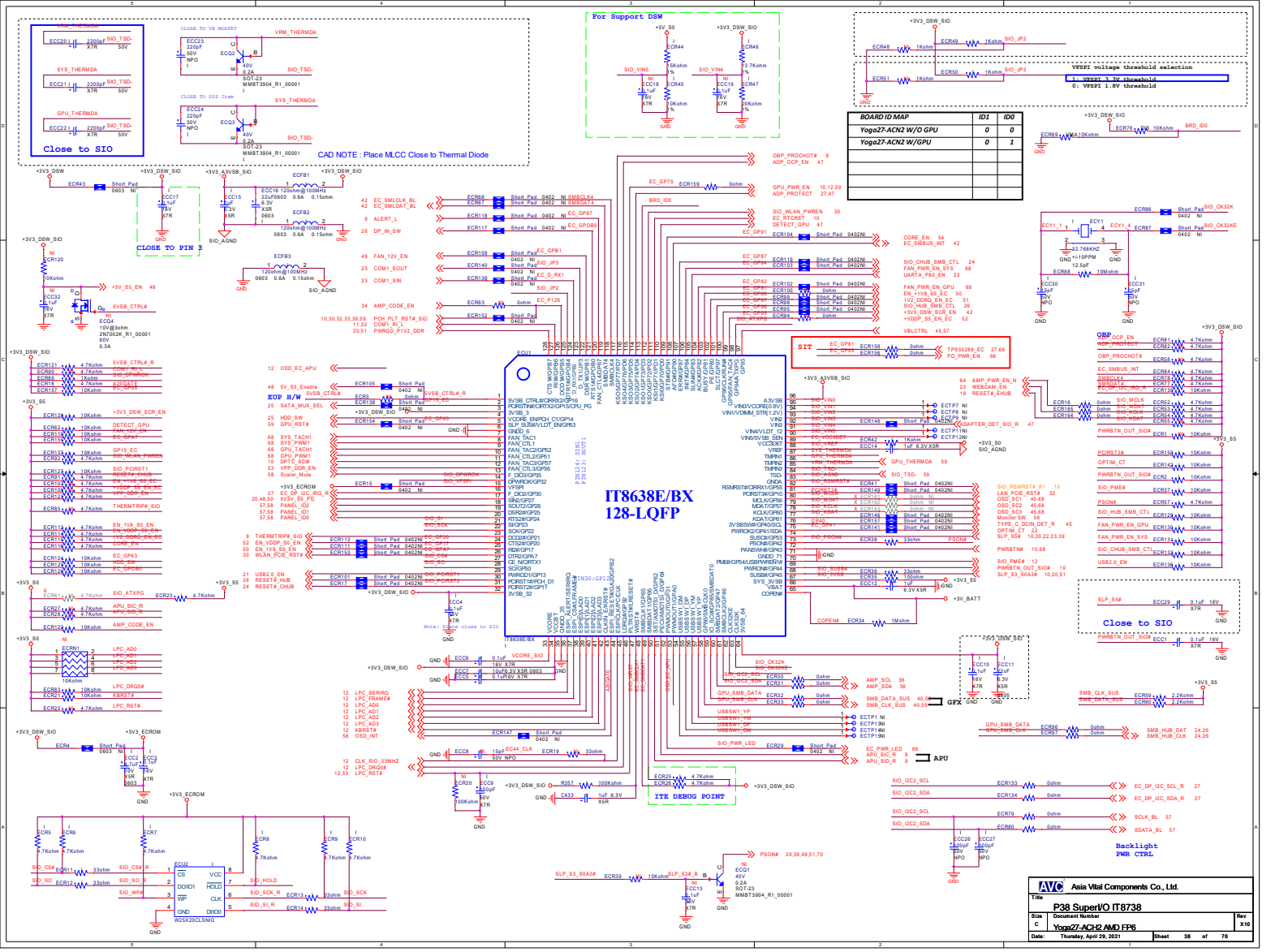

www.teknisi-indonesia.com

50 -----
51 -----
52 -----

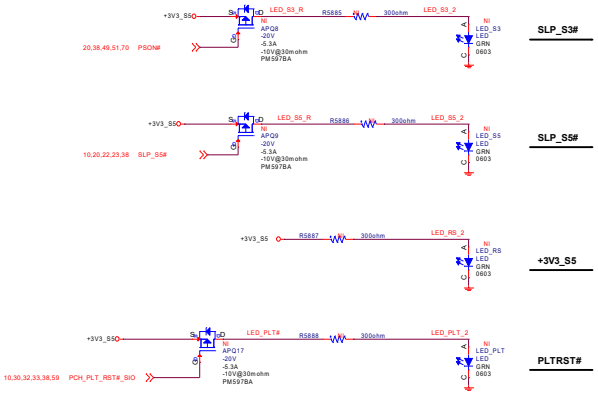

AVC Asia Vital Components Co., Ltd.			
Title: P39 Debug LED			
Size: C	Document Number: Yoga27-ACH2 AMD FP6		Rev: X10
Date: Thursday, April 29, 2021	Sheet 39 of 70		

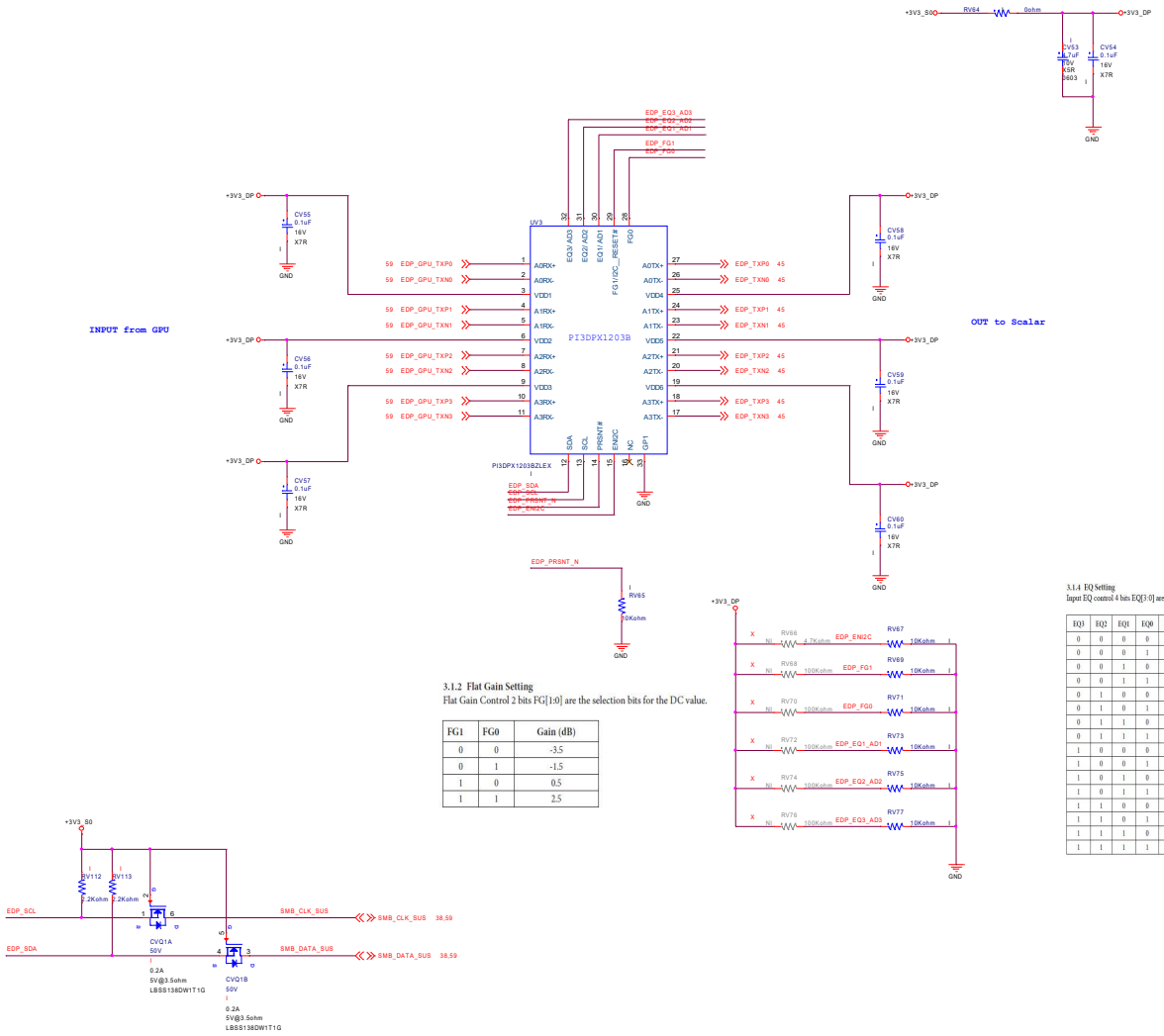

3.1.2 Flat Gain Setting

Flat Gain Control 2 bits FG[1:0] are the selection bits for the DC value.

FG1	FG0	Gain (dB)
0	0	-3.5
0	1	-1.5
1	0	0.5
1	1	2.5

3.1.4 EQ Setting

Input EQ control 4 bits EQ[3:0] are the selection pins for the equalization selection for each Main Link channel.

EQ3	EQ2	EQ1	EQ0	2.7 Gbps Input EQ(dB)	5.4 Gbps Input EQ(dB)	8 Gbps Input EQ(dB)
0	0	0	0	2.3	3.2	3.9
0	0	0	1	2.4	3.5	4.4
0	0	1	0	2.5	3.8	4.9
0	0	1	1	2.6	4.1	5.5
0	1	0	0	2.7	4.5	6.0
0	1	0	1	2.9	4.8	6.5
0	1	1	0	3.0	5.1	6.9
0	1	1	1	3.1	5.5	7.4
1	0	0	0	3.2	5.8	7.8
1	0	0	1	3.4	6.1	8.3
1	0	1	0	3.5	6.4	8.7
1	0	1	1	3.7	6.7	9.0
1	1	0	0	3.8	7.0	9.4
1	1	0	1	4.0	7.4	9.8
1	1	1	0	4.1	7.6	10.1
1	1	1	1	4.3	7.9	10.4

AVC Asia Vital Components Co., Ltd.

Title: P40 DP REDRIVER

Size	Document Number	Rev
C	Yoga27-ACH2 AMD FP6	X10

Date: Thursday, April 29, 2021 | Sheet 40 of 70

eDP 4K CONN

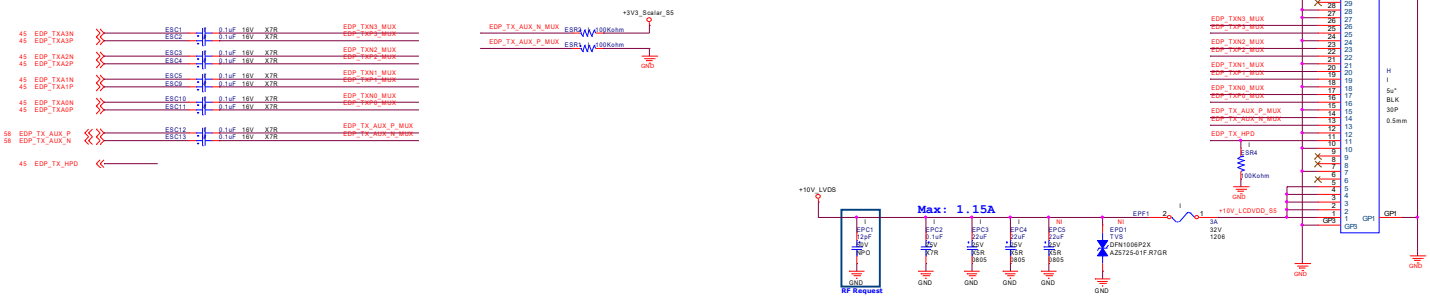

AVC Asia Vital Components Co., Ltd.			
Title: P41 eDP 4K Connector			
Size: C	Document Number: Yoga27-ACH2 AMD FP6		Rev: X10
Date: Thursday, April 29, 2021	Sheet 41 of 70		

SCALAR POWER

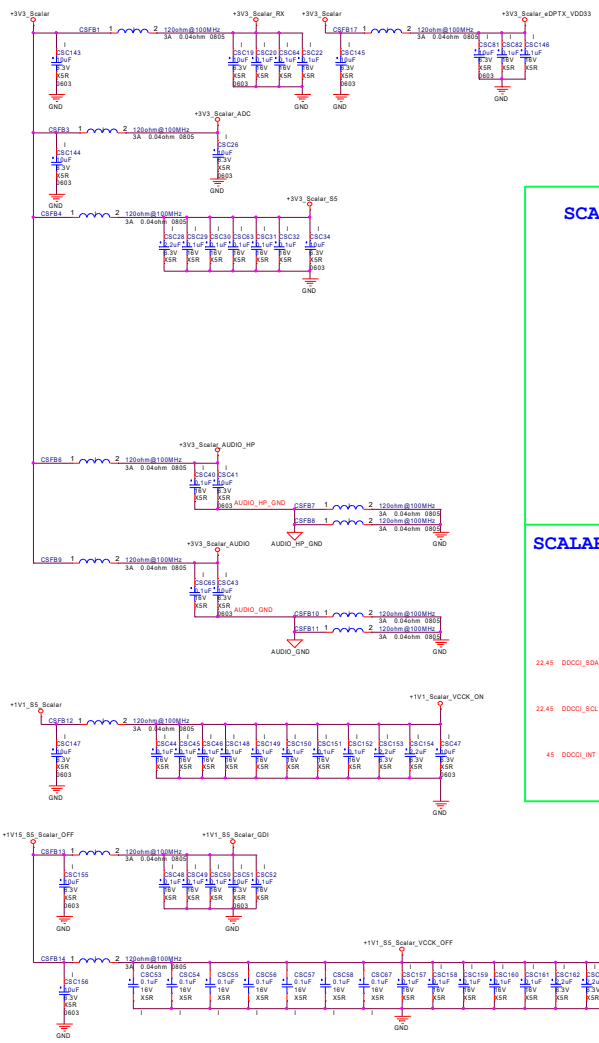

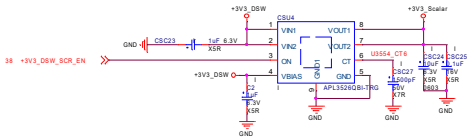

SCALAR FW UPDATE

ISP_CNTL pin must keep low level anytime except ISP mode

SCALAR ISP_CNTL	Mode
H	Simultaneous
L	Isolate

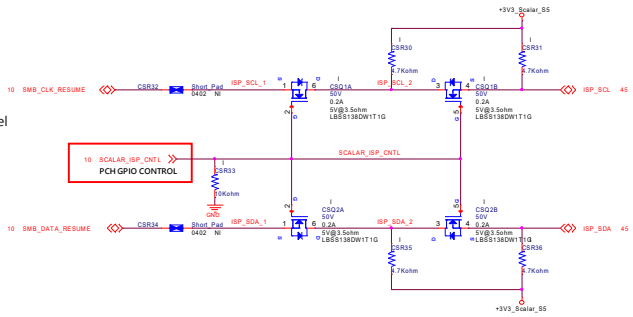

SCALAR DATA SYNC

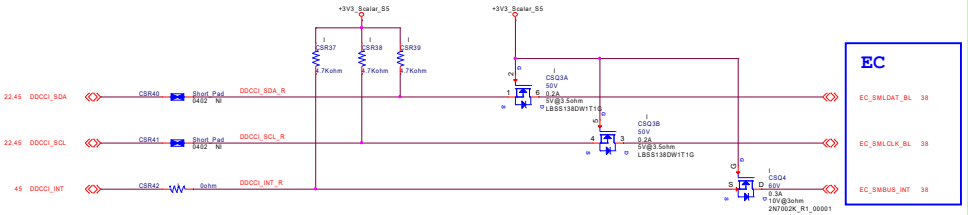

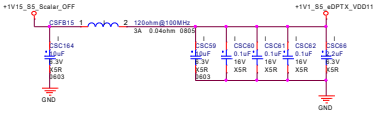

AVC	Asia Vital Components Co., Ltd.
Title	P42 Scaler Power
Size C	Document Number: Yoga27-ACH2 AMD FP6
Rev	X10
Date:	Thursday, April 29, 2021
Sheet	42 of 70

+1V1_S5_Scalar

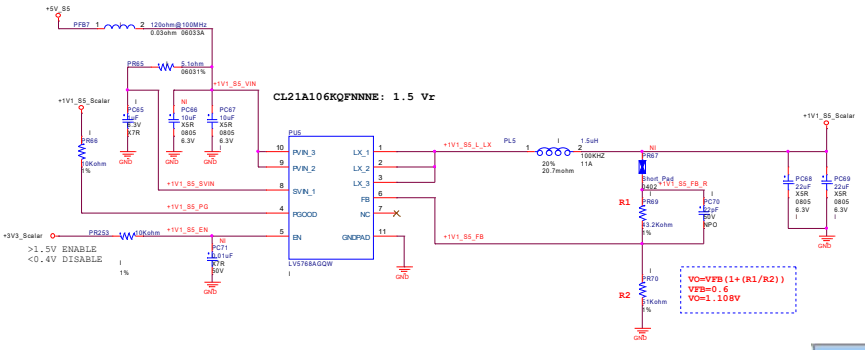

Max Load:0.5A CONVERTER

Vout	1.1V
Vin	5V
Switch Freq	1MHz
ocp	4A
Vin_Iripple	10uF/1A
Choke size	1.5uH/7.6x6.8mm
Choke Idc/Isat	9A/14A
Choke DCR	15mohm
Cin CAP	10uF
Cout CAP	22uFx2
Cout CAP_ESR	
LIR	

	(mA)	(mW)
3.3V	336	1108.8
1.1V_ON	989	1087.9
1.1V_OFF	2877	3164.7
1.5V	482	723
total	4684	6084.4

+1V5_S5_Scalar

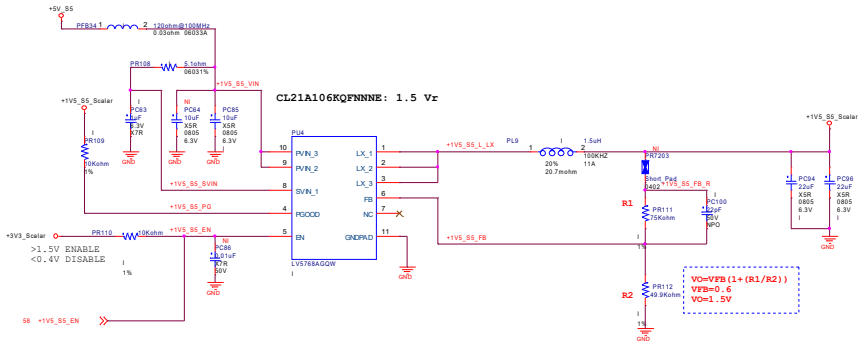

Max Load:0.5A CONVERTER

Vout	1.5V
Vin	5V
Switch Freq	1MHz
ocp	4A
Vin_Iripple	10uF/1A
Choke size	1.5uH/7.6x6.8mm
Choke Idc/Isat	9A/14A
Choke DCR	15mohm
Cin CAP	10uF
Cout CAP	22uFx2
Cout CAP_ESR	
LIR	

AVC Asia Vital Components Co., Ltd.

Title: P43 +1V1_S5_Scalar/+1V5_S5_Scalar

Size: C | Document Number: Yoga27-ACH2 AMD FP6 | Rev: X10

Date: Thursday, April 29, 2021 | Sheet 43 of 70

+1V15_S5_OFF_Scalar

Max Load:4A CONVERTER

Vout	1.15V
Vin	5V
Switch Freq	500KHz
ocp	8A
Vin_Iripple	22uF/2A x 2
Choke size	2.2uH/7.6x6.8mm
Choke Idc/Isat	9A/14A
Choke DCR	20mohm
Cin CAP	22uF x 2
Cout CAP	22uFx2
Cout CAP_ESR	
LIR	

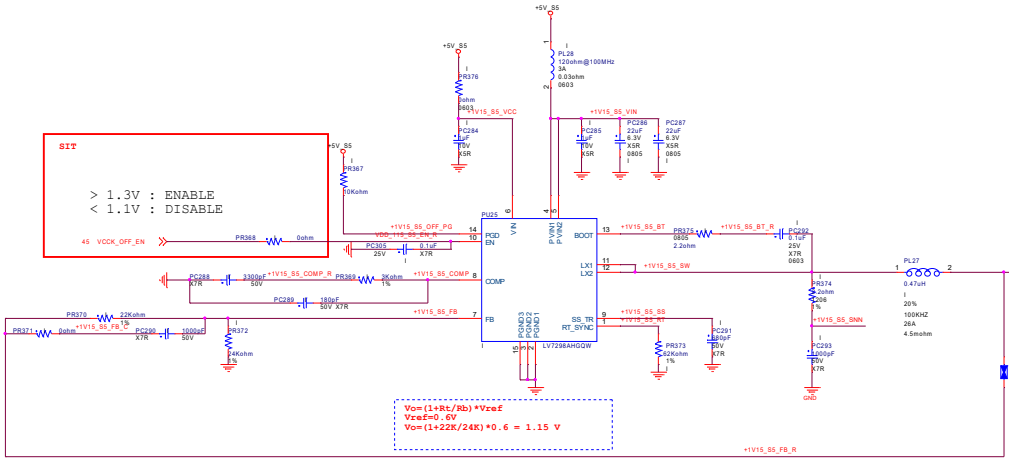

Imax:4A

	(mA)	(mW)
3.3V	336	1108.8
1.1V_ON	989	1087.9
1.1V_OFF	2877	3164.7
1.5V	482	723
total	4684	6084.4

+10V_LVDS

Max Load:1.0A

Vout	10V
Vin	20V
Switch Freq	340KHz
ocp	5.1A
Vin_Iripple	10uF/1A
Choke size	15uH/7.6x6.8mm
Choke Idc/Isat	3A/6.5A
Choke DCR	105mohm
Cin CAP	10uF,0.1uF
Cout CAP	10uFx3
Cout CAP_ESR	
LIR	0.392

TMK212BJ106KG-TD : 1.5 Vr

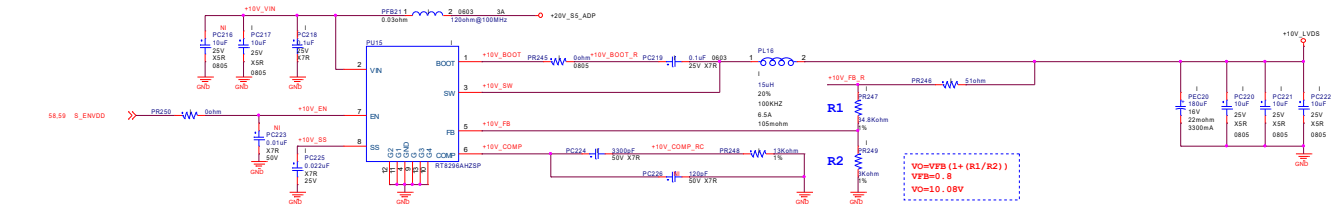

Asia Vital Components Co., Ltd.

Title: P44 +10V_LVDS&+1V15_S5_OFF

Size: C | Document Number: Yoga27-ACH2 AMD FP6 | Rev: X10

Date: Thursday, April 29, 2021 | Sheet 44 of 70

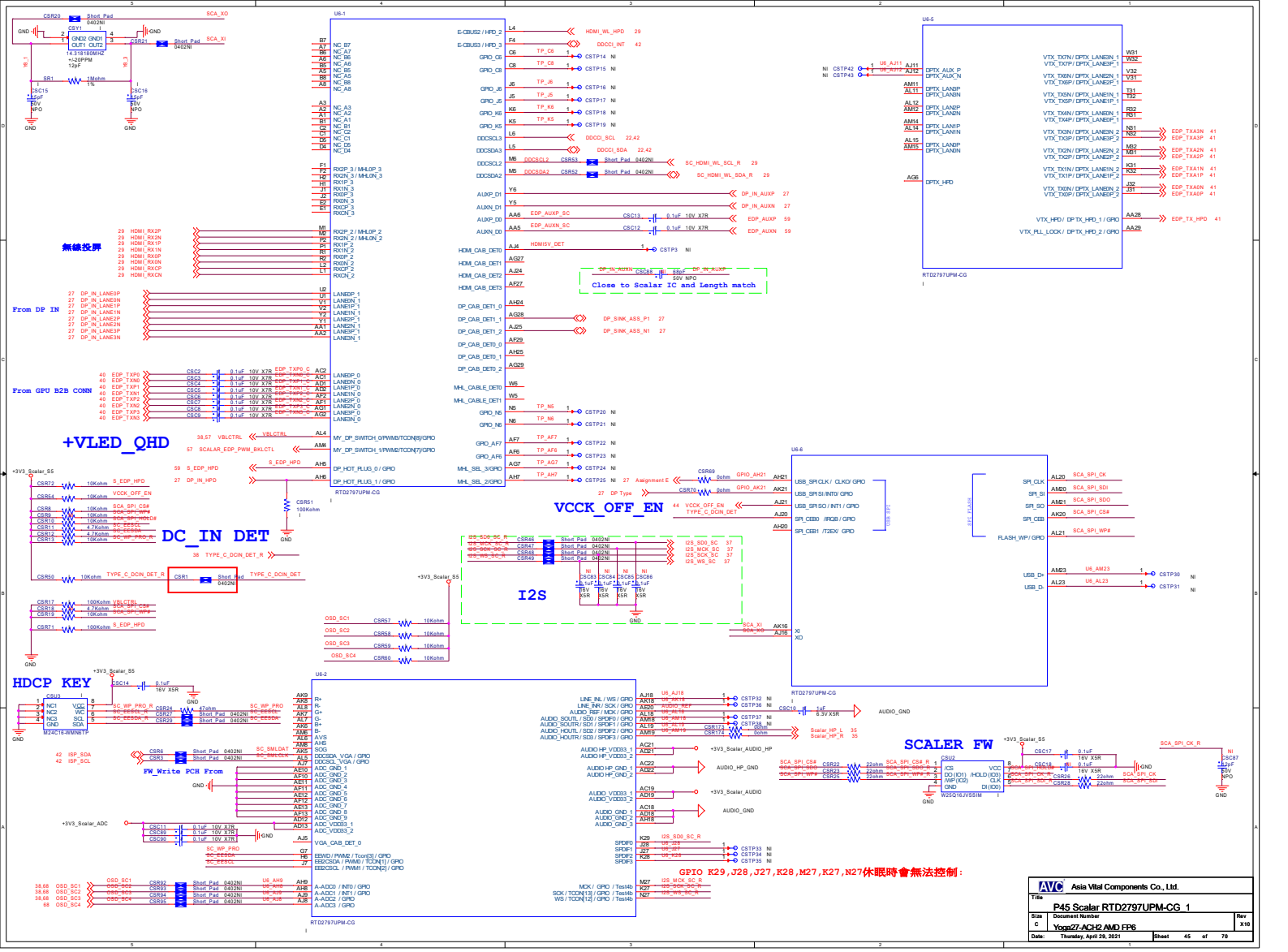
U6-1
RTD2797UPM-CG
U6-5
U6-6
U6-2
無線投影
From DP IN
From GPU B2B CONN
+VLED_QHD
DC_IN DET
VCCK_OFF_EN
I2S
HDCP KEY
FW_Write PCH From
SCALER FW
Close to Scalar IC and Length match
GPIO K29,J28,J27,K28,M27,K27,N27休眠時會無法控制:
Asia Vital Components Co., Ltd.
Title
P45 Scalar RTD2797UPM-CG_1
Size C
Document Number Yoga27-ACH2 AMD FP6
Rev X10
Date: Thursday, April 29, 2021
Sheet 45 of 70

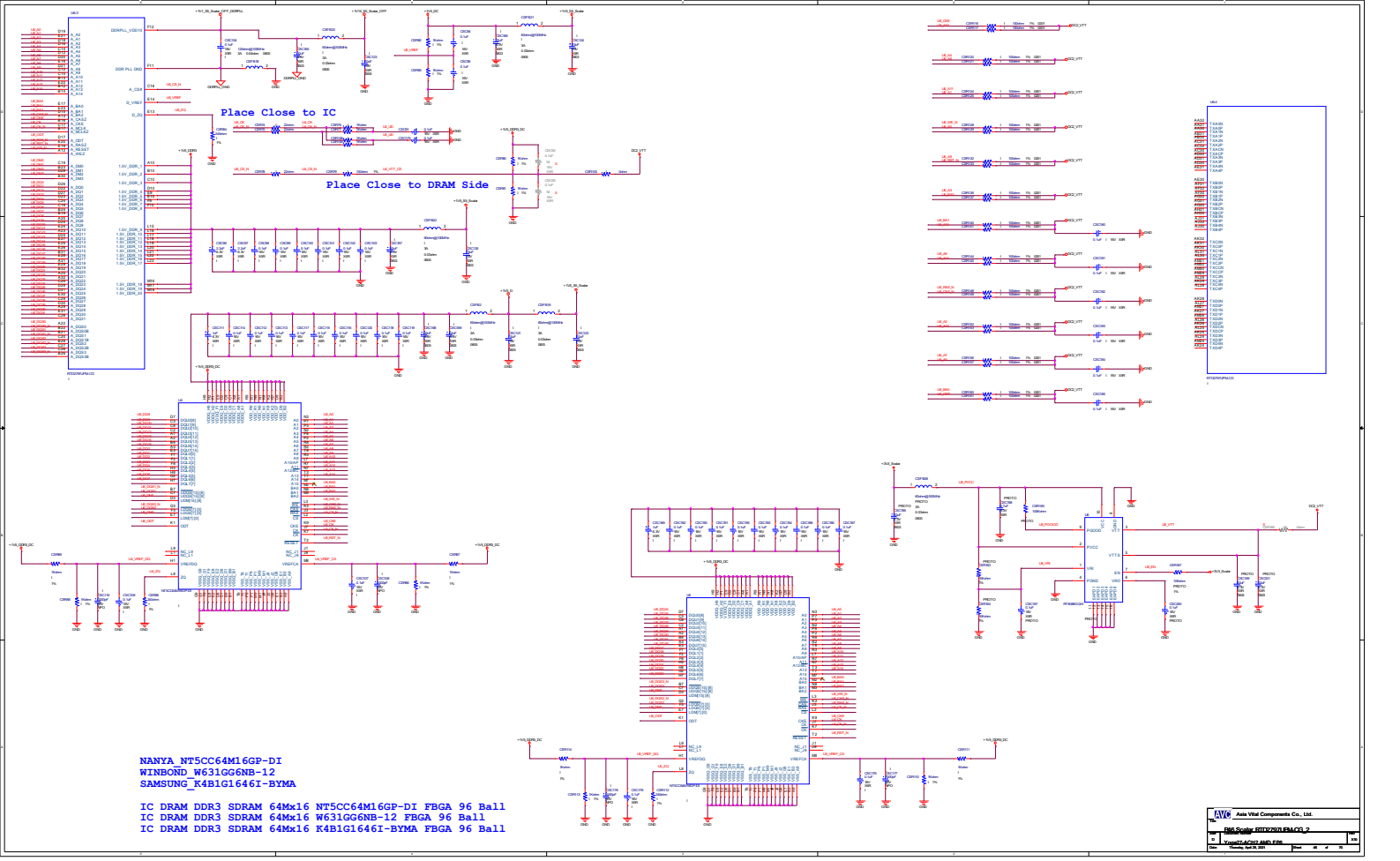

NANYA_NT5CC64M16GP-DI
WINBOND_W631GG6NB-12
SAMSUNG_K4B1G1646I-BYMA

IC DRAM DDR3 SDRAM 64Mx16 NT5CC64M16GP-DI FBGA 96 Ball
IC DRAM DDR3 SDRAM 64Mx16 W631GG6NB-12 FBGA 96 Ball
IC DRAM DDR3 SDRAM 64Mx16 K4B1G1646I-BYMA FBGA 96 Ball

Title	Asia Vital Components Co., Ltd.
	DIS Scaler EDT27570 EM-CG_2
Size	Y-rev42-AC42-AMD-EIN
Date	Thursday, April 29, 2021

+20V_DCIN

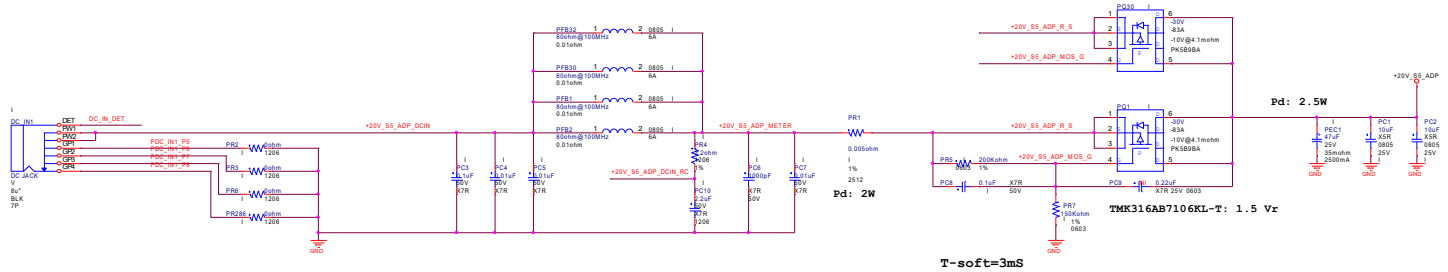

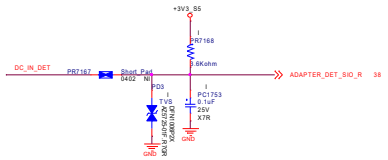

POWER METER (INA300)

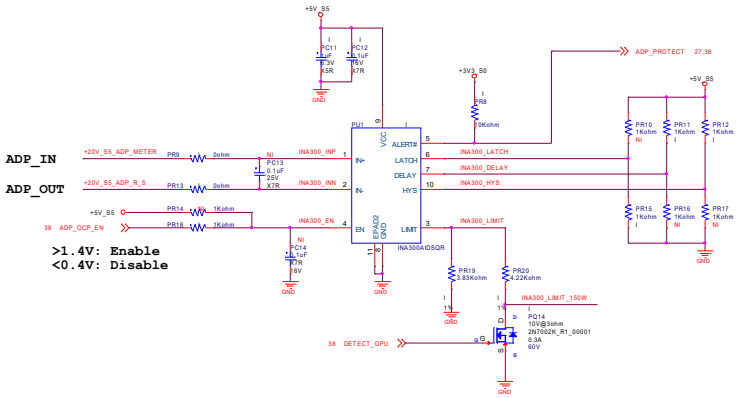

detect gpu		OBP
0	0	300W W/G
1	0	150W W/N

AVC Asia Vital Components Co., Ltd.		
Title: P47 +20V_S5_ADP/INA300		
Size: C	Document Number: Yoga27-ACH2 AMD FP6	Rev: X10
Date: Thursday, April 29, 2021	Sheet 47 of 70	

+5V_S5/+3V3_PWR

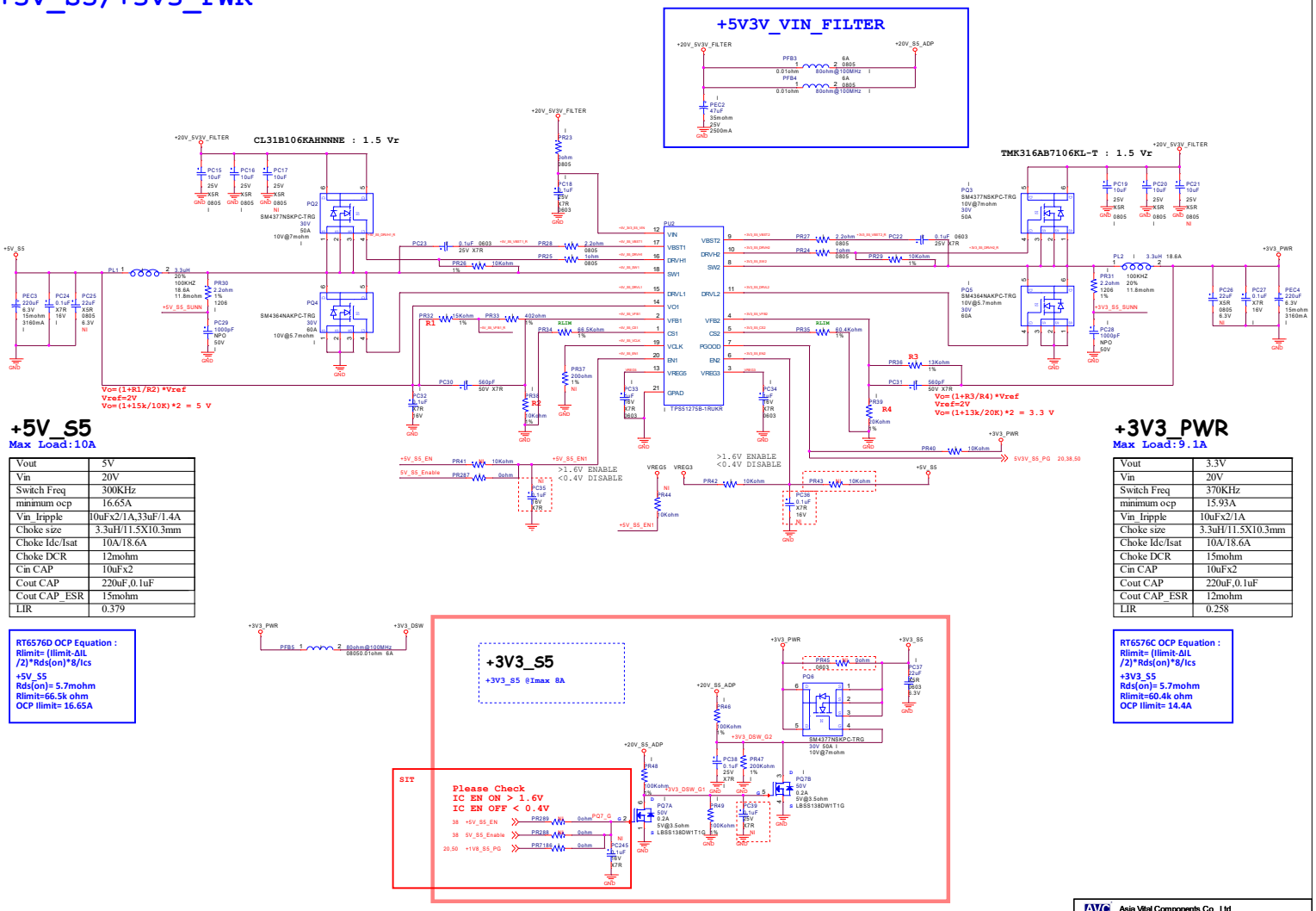

+5V_S5

Max Load:10A

Vout	5V
Vin	20V
Switch Freq	300KHz
minimum ocp	16.65A
Vin_Iripple	10uFx2/1A,33uF/1.4A
Choke size	3.3uH/11.5X10.3mm
Choke Idc/Isat	10A/18.6A
Choke DCR	12mohm
Cin CAP	10uFx2
Cout CAP	220uF,0.1uF
Cout CAP_ESR	15mohm
LIR	0.379

RT6576D OCP Equation :
Rlimit= (Ilimit-ΔIL /2)*Rds(on)*8/Ics

+5V_S5
Rds(on)= 5.7mohm
Rlimit=66.5k ohm
OCP Ilimit= 16.65A

+3V3_PWR

Max Load:9.1A

Vout	3.3V
Vin	20V
Switch Freq	370KHz
minimum ocp	15.93A
Vin_Iripple	10uFx2/1A
Choke size	3.3uH/11.5X10.3mm
Choke Idc/Isat	10A/18.6A
Choke DCR	15mohm
Cin CAP	10uFx2
Cout CAP	220uF,0.1uF
Cout CAP_ESR	12mohm
LIR	0.258

RT6576C OCP Equation :
Rlimit= (Ilimit-ΔIL /2)*Rds(on)*8/Ics

+3V3_S5
Rds(on)= 5.7mohm
Rlimit=60.4k ohm
OCP Ilimit= 14.4A

AVC	Asia Vital Components Co., Ltd.
Title	P48 +5V/+3V3_S5
Size	C
Document Number	Yoga27-ACH2 AMD FP6
Rev	X10
Date:	Thursday, April 29, 2021
Sheet	48 of 70

+5V_S0

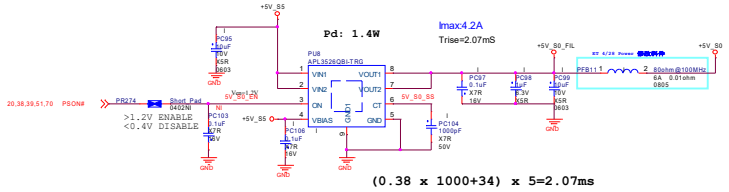

www.teknisi-indonesia.com

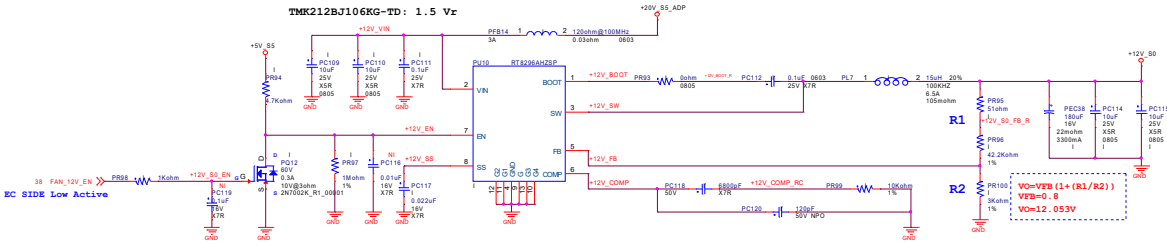

+12V_S0

Max Load:2A

Vout	12V
Vin	20V
Switch Freq	340KHz
ocp	5.1A
Vin_Iripple	10uF/1A
Choke size	15uH/7.6x6.8mm
Choke Idc/Isat	3A/6.5A
Choke DCR	105mohm
Cin CAP	10uF,0.1uF
Cout CAP	10uFx2
Cout CAP_ESR	
LIR	

AVC Asia Vital Components Co., Ltd.			
Title: P49 +12V_S0/+5V/+3V3_S0			
Size: C	Document Number: Yoga27-ACH2 AMD FP6		Rev: X10
Date: Thursday, April 29, 2021	Sheet 49 of 70		

Max Load:4A CONVERTER

Vout	1.8V
Vin	5V
Switch Freq	500KHz
ocp	8A
Vin_Iripple	22uF/2A x 2
Choke size	2.2uH/7.6x6.8mm
Choke Idc/Isat	9A/14A
Choke DCR	20mohm
Cin CAP	22uF x 2
Cout CAP	22uFx2
Cout CAP_ESR	
LIR	

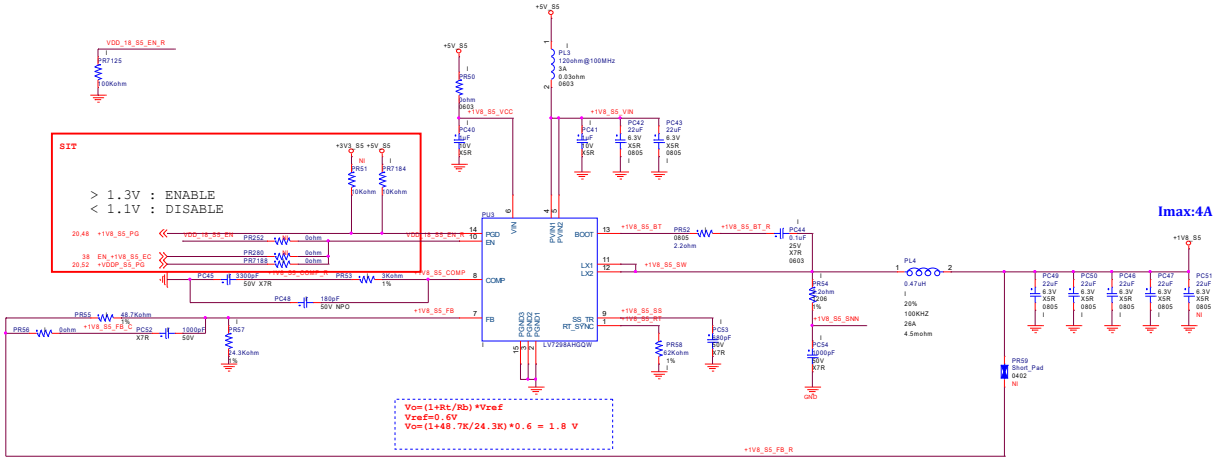

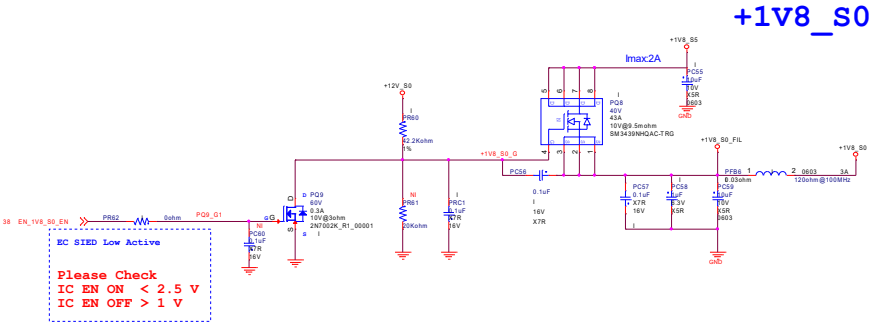

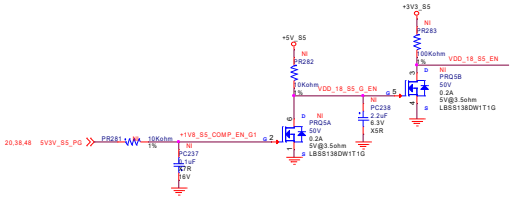

AVC	Asia Vital Components Co., Ltd.
Title	P50 +1V8_S5 /+1V8_S0
Size C	Document Number Yoga27-ACH2 AMD FP6
Rev	X10
Date: Thursday, April 29, 2021	Sheet 50 of 70

VID	FB
HIGH	0.675V
LOW	0.75V

+1V2_DDR4_S3

Max Load:7.1A

Vout	1.2V
Vin	20V
Switch Freq	400KHz
ocp	15.3A
Vin_Iripple	10uFx2/1A
Choke size	1.5uH/7.3X6.8mm
Choke Idc/Isat	9A/14A
Choke DCR	15mohm
Cin CAP	10uFx2
Cout CAP	220uF,22uF
Cout CAP_ESR	17mohm
LIR	0.265

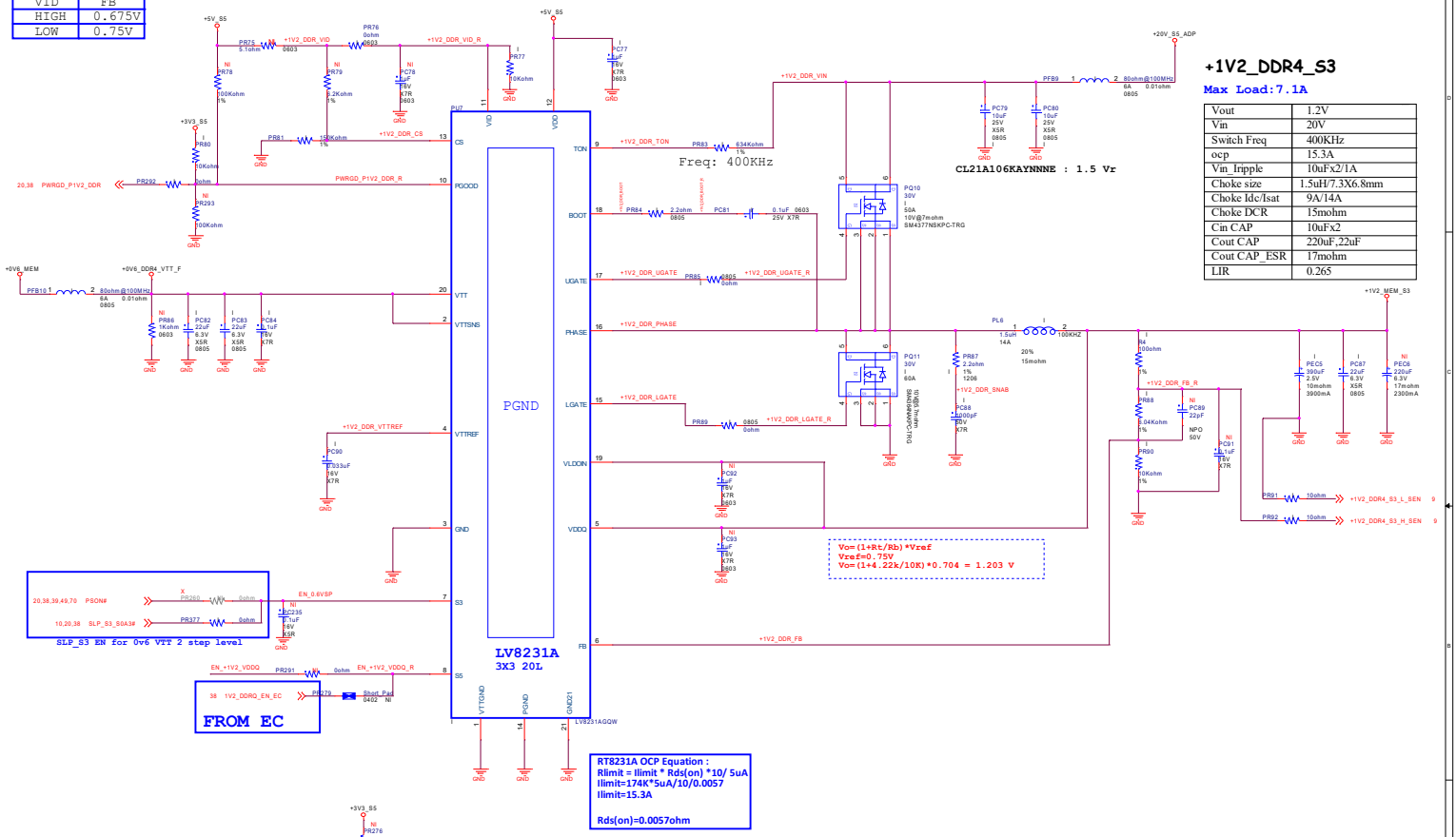

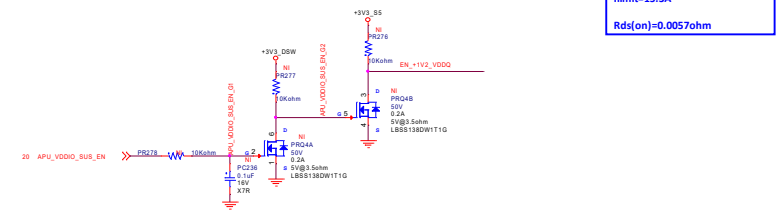

Asia Vital Components Co., Ltd.		
Title: P51 +1V2_MEM_S3 / +0V6_MEM		
Size: C	Document Number: Yoga27-ACH2 AMD FP6	Rev: X10
Date: Thursday, April 29, 2021	Sheet 51 of 70	

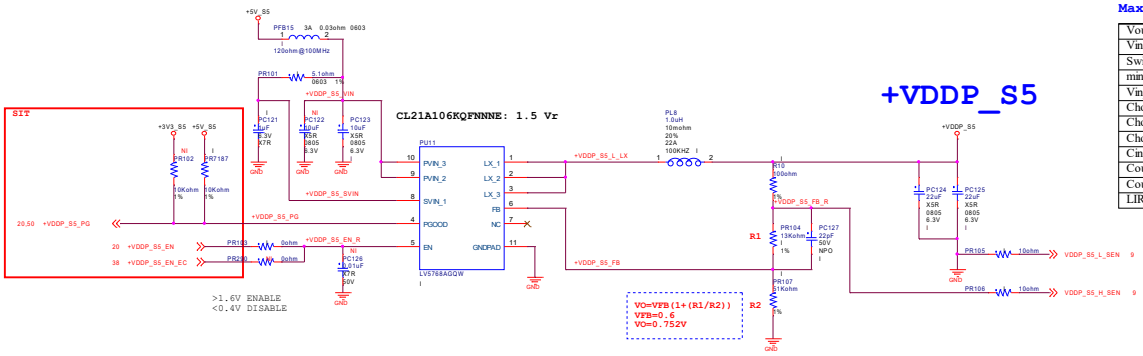

Max Load:2A

Vout	0.75V
Vin	5V
Switch Freq	1MHz
minimum ocp	4A
Vin_Iripple	10uFx2/1A
Choke size	1uH/7.6X6.8mm
Choke Idc/Isat	11A/22A
Choke DCR	10mohm
Cin CAP	10uFx2
Cout CAP	22uFx2
Cout CAP_ESR	
LIR	0.31

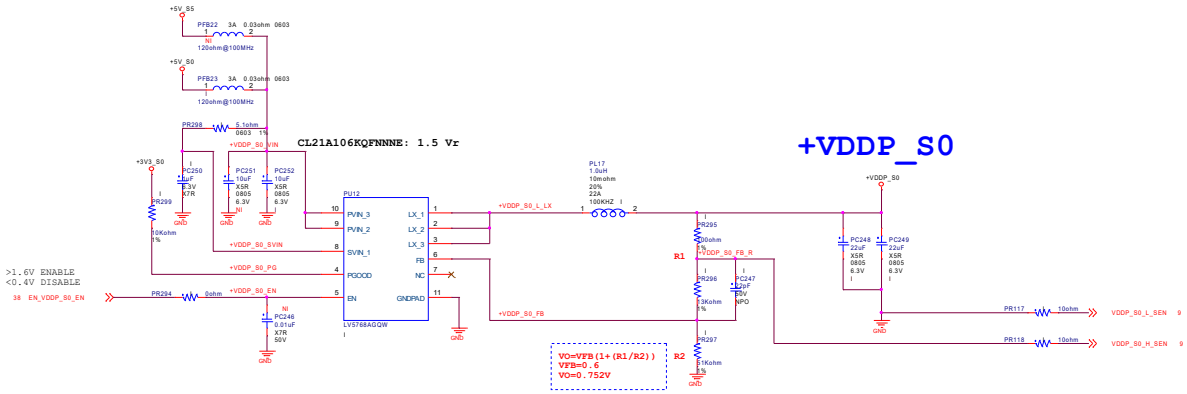

Max Load:2A

Vout	0.75V
Vin	5V
Switch Freq	800KHz
minimum ocp	8A
Vin_Iripple	10uFx2/1A
Choke size	1uH/7.6X6.8mm
Choke Idc/Isat	11A/22A
Choke DCR	10mohm
Cin CAP	10uFx2
Cout CAP	22uFx3
Cout CAP_ESR	
LIR	0.398

AVC Asia Vital Components Co., Ltd.			
Title: P52 +VDDP_S5&+VDDP_S0			
Size: C	Document Number: Yoga27-ACH2 AMD FP6		Rev: X10
Date: Thursday, April 29, 2021	Sheet 52 of 70		

+2V5_VPP_DDR

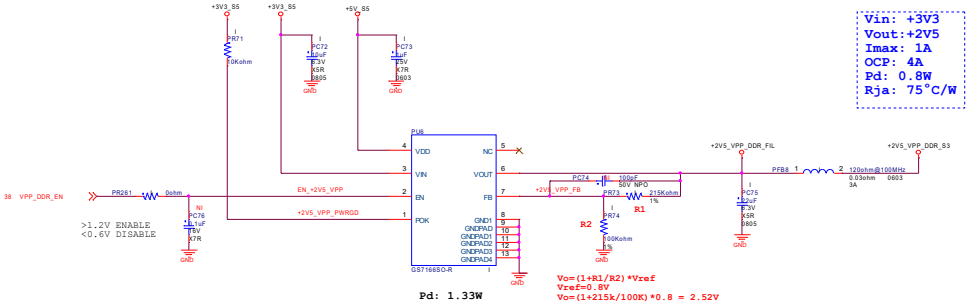

AVC Asia Vital Components Co., Ltd.			
Title: P53 +2V5_VPP_DDR			
Size: C	Document Number: Yoga27-ACH2 AMD FP6		Rev: X10
Date: Thursday, April 29, 2021	Sheet 53 of 70		

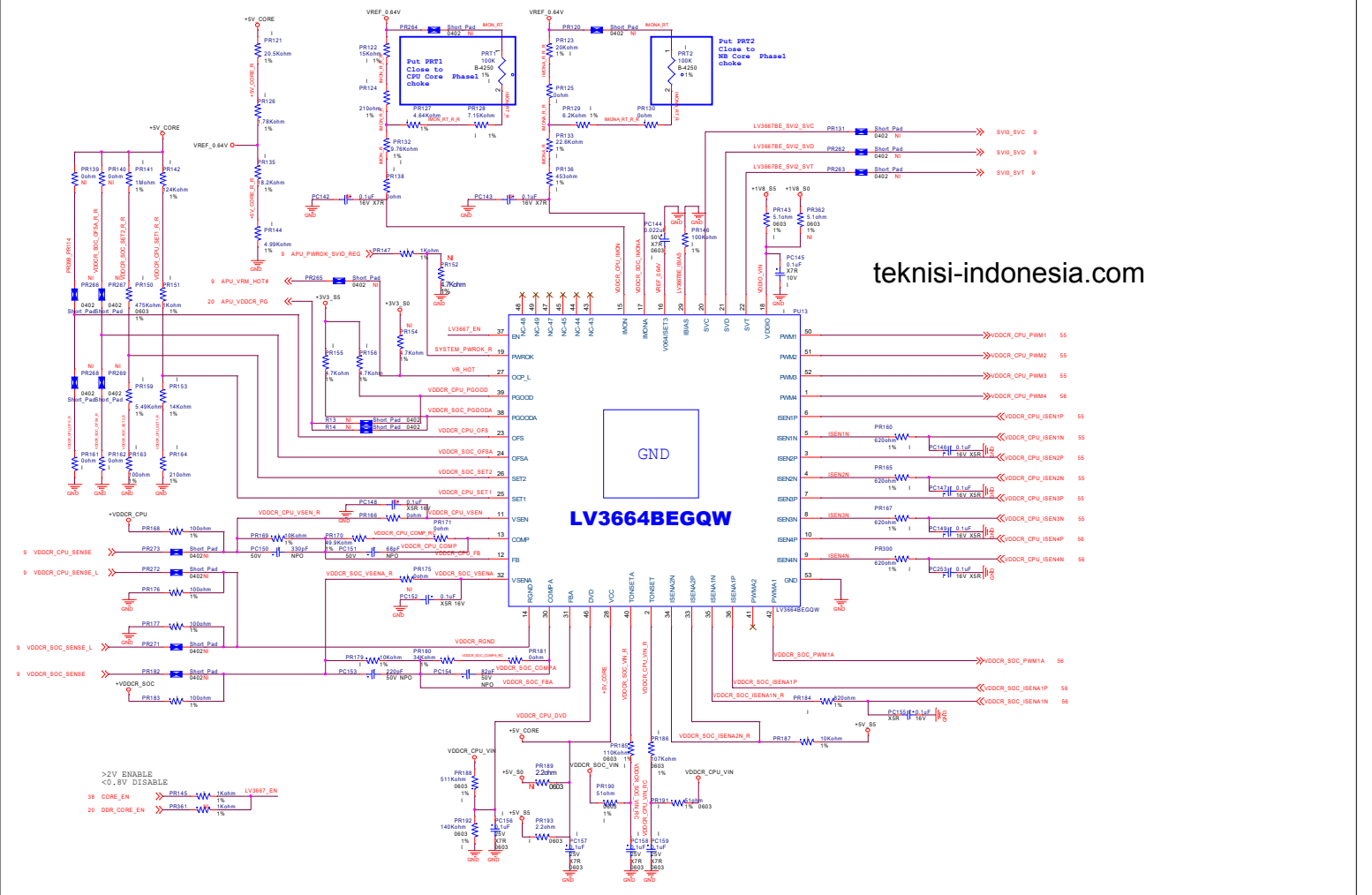

AVC	Asia Vital Components Co., Ltd.		
Title	P54 +VDDCR_CPU&SOC_Controller		
Size C	Document Number Yoga27-ACH2 AMD FP6		Rev X10
Date: Thursday, April 29, 2021		Sheet 54 of 70	

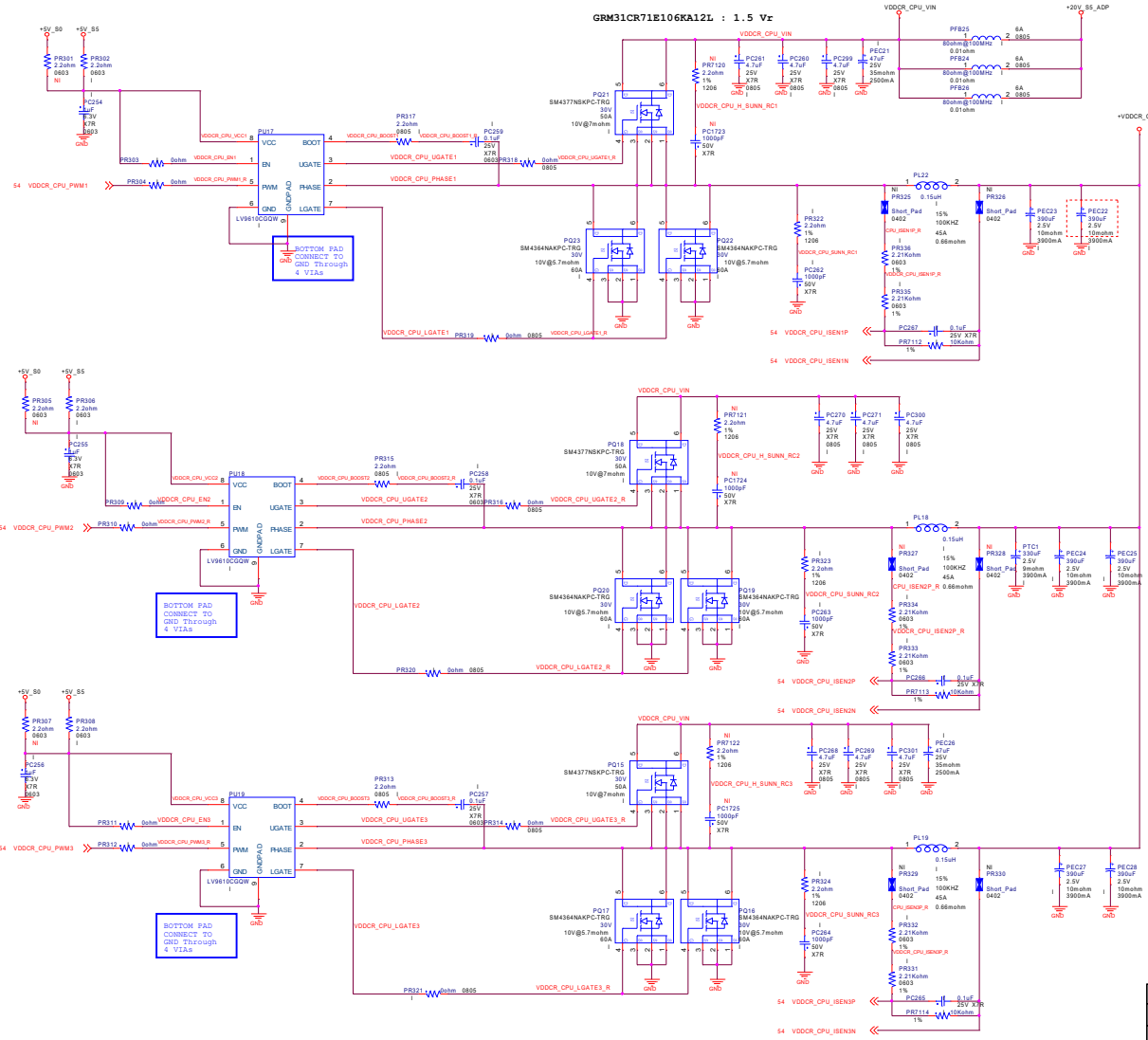

Vout	0.9V
Vin	20V
Switch Freq	400KHz
minimum ocp	150A
Vin_Iripple	10uFx8/1A,47uFx3/2.8A
Choke size	0.15uH/7.6x6.8mm
Choke Idc/Isat	36A/45A
Choke DCR	0.66mohm
Cin CAP	10uFx8 +47uFx3
Cout CAP	390uFx8 + 330uFx1
Cout CAP_ESR	10mohmx8 // 9mohmx1
LIR	

Asia Vital Components Co., Ltd.

Title: P55+VDDCR_CPU 1~3ph Out

Size: C | Document Number: Yoga27-ACH2 AMD FP6 | Rev: X10

Date: Thursday, April 29, 2021 | Sheet 55 of 70

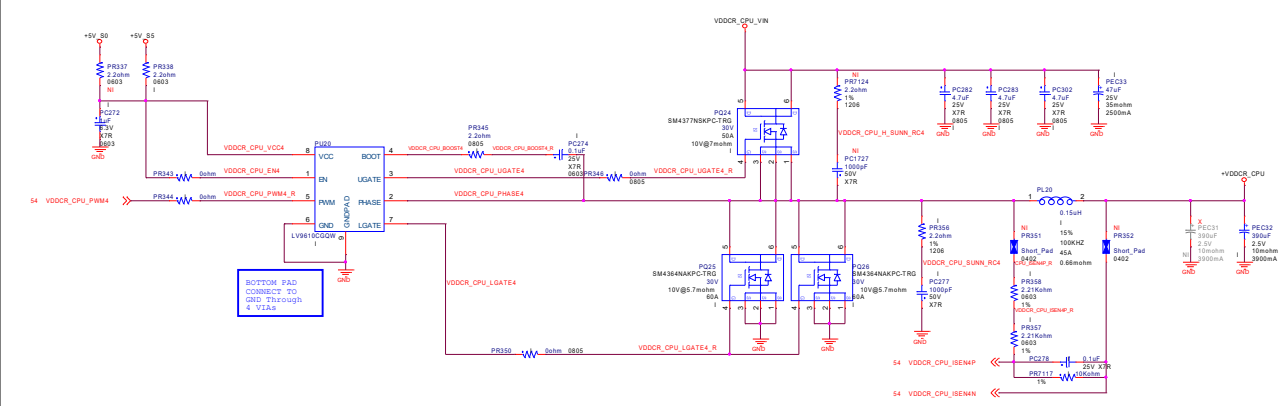

+VDDCR_CPU

Vin:+20V
Vout:+VDDCR_CPU
DC Loadline: 0.7mohm
TDC:85A
Imax:105A
OCP:150A

Vout	0.9V
Vin	20V
Switch Freq	400KHz
minimum ocp	150A
Vin_Iripple	10uFx8/1A,47uFx3/2.8A
Choke size	0.15uH/7.6x6.8mm
Choke Idc/Isat	36A/45A
Choke DCR	0.66mohm
Cin CAP	10uFx8 +47uFx3
Cout CAP	390uFx8 + 330uFx1
Cout CAP_ESR	10mohmx8 // 9mohmx1
LIR	

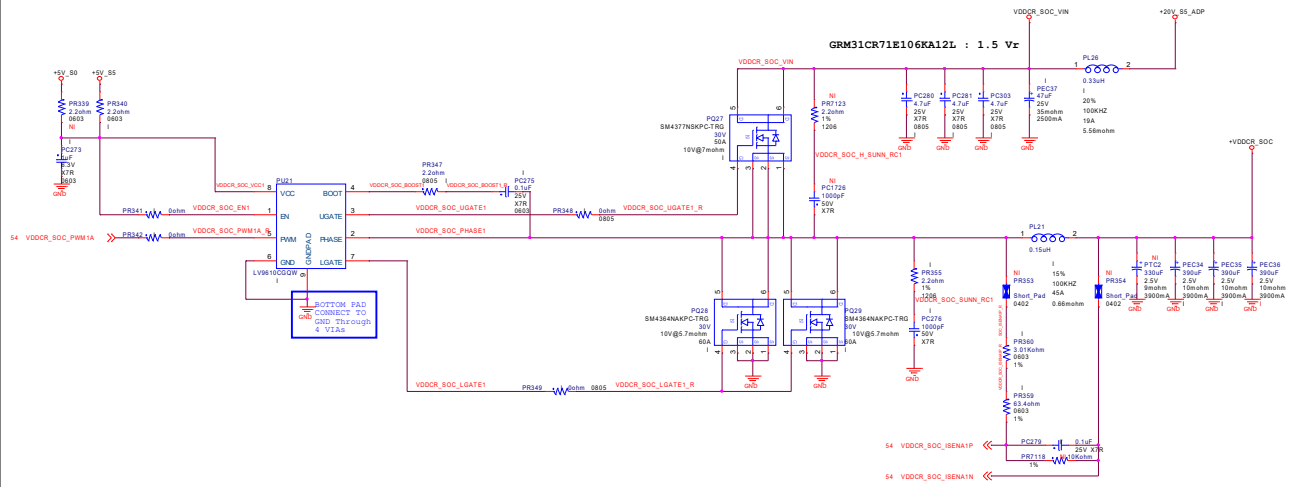

+VDDCR_SOC

Vin:+20V
Vout:+VDDCR_SOC
DC Loadline: 2.1mohm
TDC:15A
Imax:20A
OCP:40A

Vout	0.9V
Vin	20V
Switch Freq	400KHz
minimum ocp	40A
Vin_Iripple	10uFx2/1A,47uFx1/2.5A
Choke size	0.15uH/7.6x6.8mm
Choke Idc/Isat	36A/45A
Choke DCR	0.66mohm
Cin CAP	10uFx2 +47uFx1
Cout CAP	390uFx3 + 330uFx1
Cout CAP_ESR	10mohmx3 // 9mohmx1
LIR	

Asia Vital Components Co., Ltd.

Title: P56+VDDCR_CPU 4ph+VDDCR_SOC 1ph

Size: C | Document Number: Yoga27-ACH2 AMD FP6 | Rev: X10

Date: Thursday, April 29, 2021 | Sheet 56 of 70

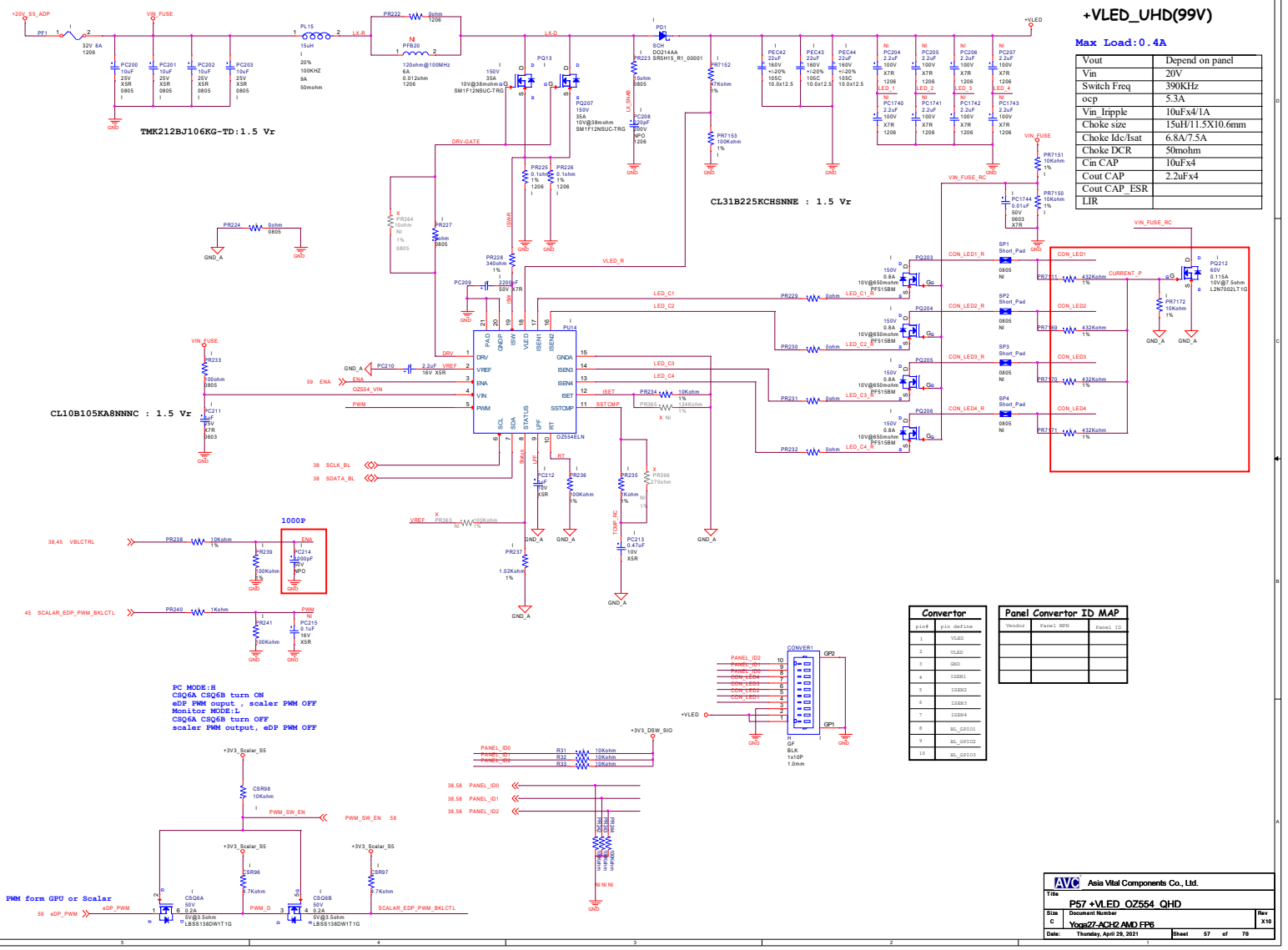
+VLED_UHD(99V)
Max Load:0.4A
Vout | Depend on panel
Vin | 20V
Switch Freq | 390KHz
ocp | 5.3A
Vin_Iripple | 10uFx4/1A
Choke size | 15uH/11.5X10.6mm
Choke Idc/Isat | 6.8A/7.5A
Choke DCR | 50mohm
Cin CAP | 10uFx4
Cout CAP | 2.2uFx4
Cout CAP_ESR
LIR
TMK212BJ106KG-TD:1.5 Vr
CL31B225KCHSNNE : 1.5 Vr
CL10B105KA8NNNC : 1.5 Vr
1000P
PC MODE:H
CSQ6A CSQ6B turn ON
eDP PWM ouput , scaler PWM OFF
Monitor MODE:L
CSQ6A CSQ6B turn OFF
scaler PWM output, eDP PWM OFF
PWM form GPU or Scalar
Convertor
Panel Convertor ID MAP
Asia Vital Components Co., Ltd.
P57 +VLED_OZ554_QHD
Yoga27-ACH2 AMD FP6
Thursday, April 29, 2021
Sheet 57 of 70

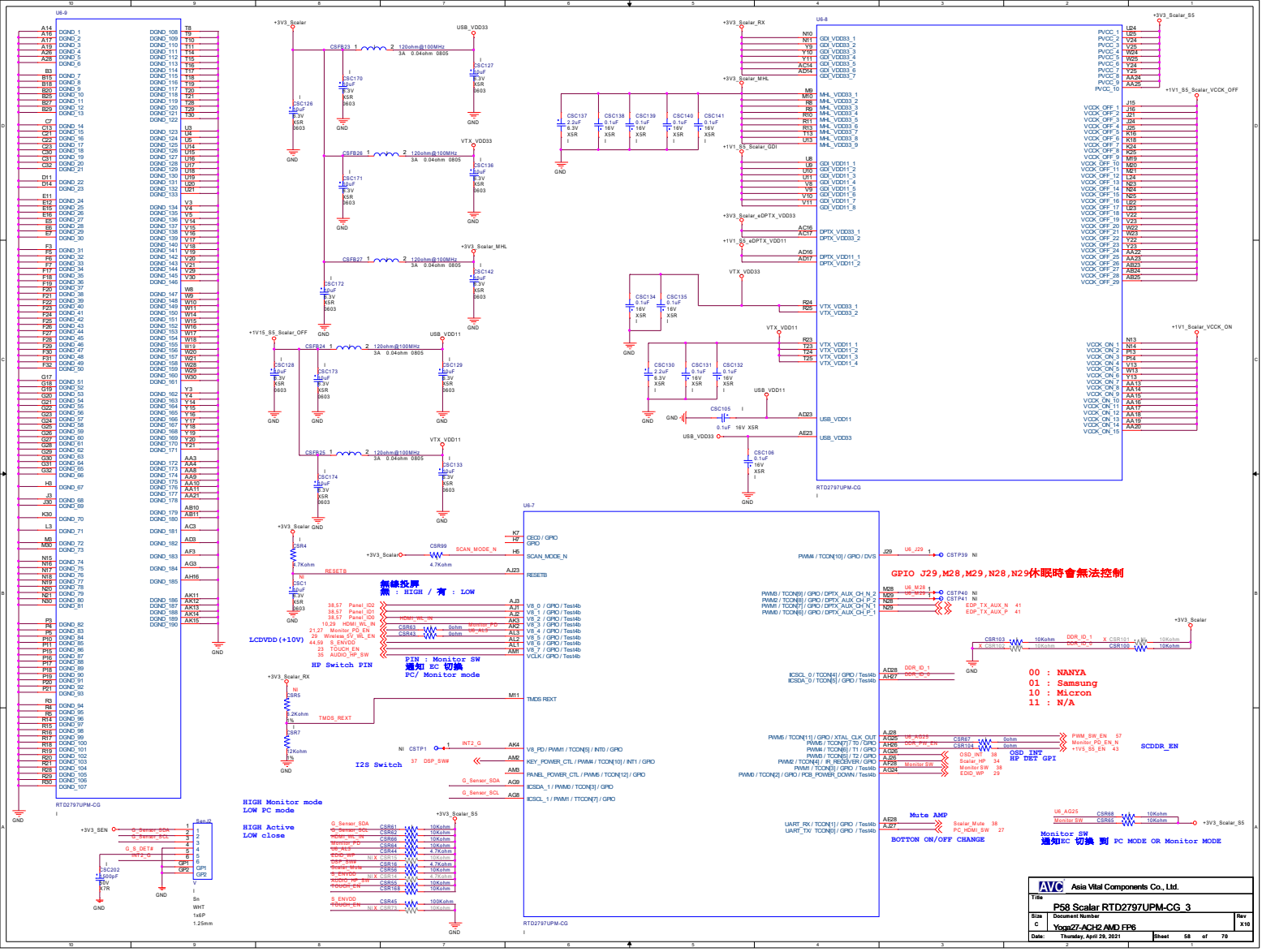

www.teknisi-indonesia.com

GPU - ASIC PCIe I/F

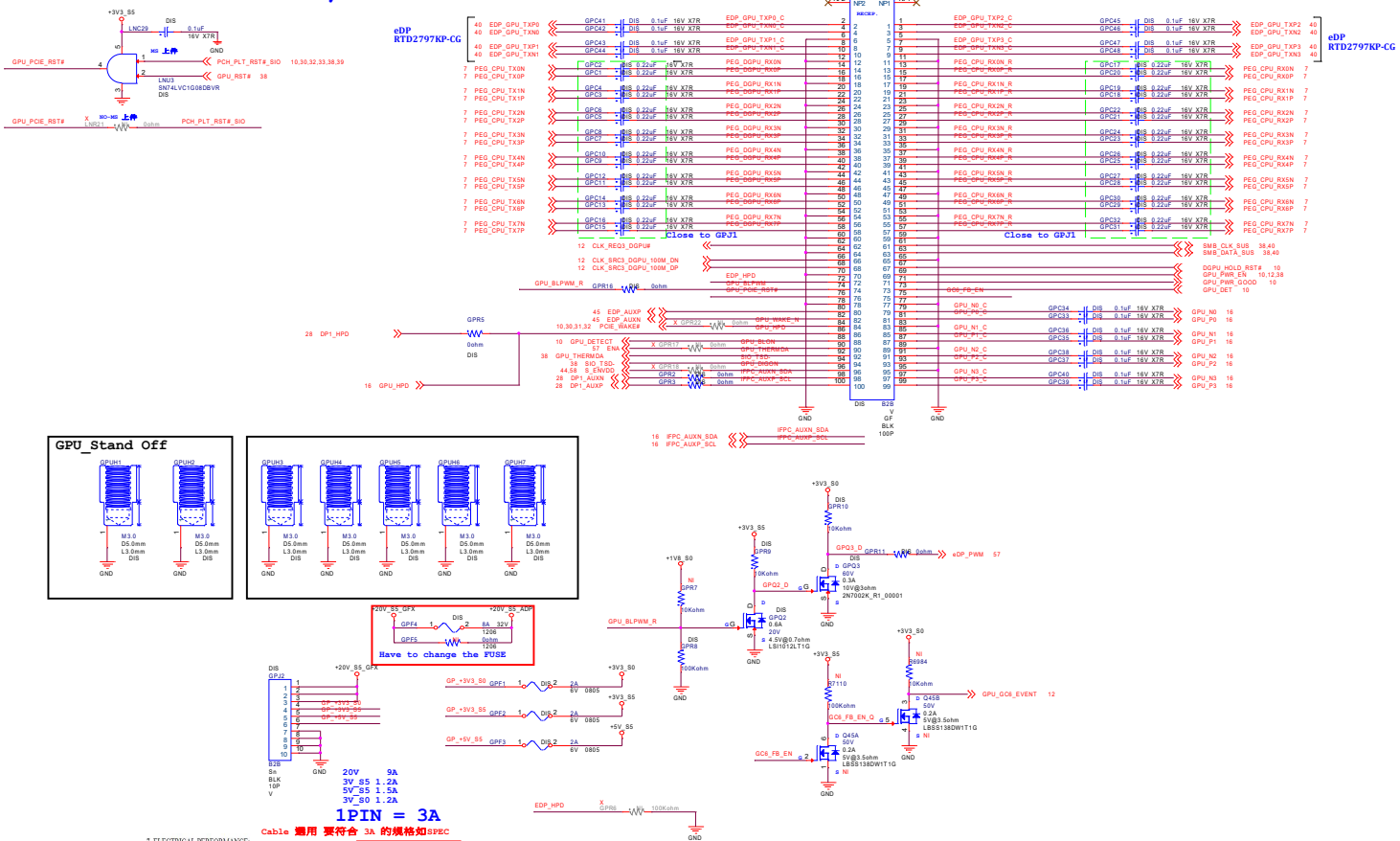

7. ELECTRICAL PERFORMANCE:

	ITEM	TEST CONDITION	REQUIREMENT
7.1	Rated current and voltage		3A 50V AC (r.m.s.) (AWG#24) 2.0A 50V AC (r.m.s.) (AWG#26) 1.5A 50V AC (r.m.s.) (AWG#28 - AWG#30)

AVC Asia Vital Components Co., Ltd.			
Title: P59 GFX PCIe Interface			
Size: C	Document Number: Yoga27-ACH2 AMD FP6		Rev: X10
Date: Thursday, April 29, 2021	Sheet 59 of 70		

From YOGA27-REFRESH_AMD_ET_X01_1125_1530Y20 to YOGA27-ACN2_AMD_ET_X01_1125Y20 in ET

2020/11/25
1. Page 9,59 : Move DP0 signal from AMD CPU to GPU B2B connector.
2020/11/27
1.Page 57,59 : Connect GPU_BLON via GPR17 to PU14
2.Yoga27-R 更改名稱為Yoga27-ACN2
3.Page 44 : Connect GPU_DIGON via GPR18 to PU15
2020/11/30
1.Page 40 : Add UV3 (DP Redriver) circuit
2.Page 65 : Depop AMI BIOS Label (LB11), because USI said that BIOS is Phoneix , Phoneix bios does not have labe.
2020/12/3
1.Page 51 : Depop PR260 and Add PR377 (SLP_S3_S0A3#) for 0v6 VTT 2 step level
2.Page 38 : Insert ECR52 and connect ECR16 to SIO_MCLK
2020/12/4
1.Page 23 : Connect CMF1 to +5V_S5
2.Page 23 : Add load switch U7 circuit for webcam
3.Page 38 : Insert ECR53 and connect ECR165 to WEBCAM_EN
4.Page 23 : Connect CMR5 to WEBCAM_EN and GND
5.Page 16 : Insert RV52 and depop RV53 for HDMI MUX input port 2 selection for APU
2020/12/8
1.Page 64 : Connect PR7193 to VREG5
2.Page 64 : Change PR7193 to 100kohm and depop PR7190
3.Page 46 : Change U4 to NANYA NT5CC64M16GP-DI
2020/12/9
1.Page 57 : Change PL15 to 437-010327-01A
2.Page 10 : Swap GPU_PWR_EN and GPU_GC6_WAKE, because GPU_PWR_EN should be connected to S5 domain GPIO pin for AMD review suggestion
3.Page 10 : Insert APR125 and connect to GPU_GC6_WAKE
4.Page 10 : Add APR520 and pull up to +3V3_S5 for AGPIO12
5.Page 10,59 : GPU_GC6_WAKE change name as "GPU_GC6_WAKE_BOMACO_EN" for AMD review suggestion
6.Page 32 : Add LNC31 0.22uF for overshoot
7.Page 59 : Connect GPR1 to +3V3_S5 and depop GPR6,GPR12,GPR15
8.Page 59 : Add GPQ5 circuit
9.Page 10 : APR31 Chage to 1k for overshoot and change APC136 to 0.01uF I for SI Issue monotonic
10.Page 30 : MRC18 Chage to 0.22uF and MRC9 chage to 100pF for overshoot
11.Page 9 : Add APC138 and APC139(NI) for overshoot
12.Page 10 : APC19 Change to 220pF I for SI Issue overshoot
2020/12/10
1.Page 10 : Change APC136 to 432-010274-01A for USI suggestion
2.Page 59 : Insert LNU3 and depop LNR21
3.Page 38,59 : Change net name from SSD_VR_THERMDA to GPU_THERMDA for LCFC suggestion
2020/12/11
1.Page 59 : Insert LNC29
2.Page 59 : Connect GPU_WAKE_N to GPJ1 pin 84 and GPR22(NI)
2020/12/14
1.Page 65 : Update PCB P/N

AVC Asia Vital Components Co., Ltd.		
Title: P60 EE Change List 1		
Size: C	Document Number: Yoga27-ACH2 AMD FP6	Rev: X10
Date: Thursday, April 29, 2021	Sheet 60 of 70	

From YOGA27-ACN2_AMD_SDV_X01_1214Y20 to YOGA27-ACN2_AMD_SDV_X01_1218Y20 in SDV

2020/12/18
1.Page 41 : Insert ESR1,ESR2.
2.Page 45,46,58 : Change scalar (U6) to RTD2797UPM-CG
2020/12/21
1.Page 10 : Connect DGPU_HOLD_RST# to AGPIO9 and connect APR115 to +3V3_S5
2.Page 10 : Connect GPU_GC6_WAKE_BOMACO_EN to AGPIO19 and connect APR125 to +3V3_S5
3.Page 9,10,15,30,32,44,45,46,47,55,56,57,58,65,66 : Update function BOM
2020/12/23
1.Page 10 : Insert APR105 and depop APU3 and APC5 for Non Modern standby
2.Page 30,32 : Insert LNR22,LNR20 and depop LNU4,LNU2 for Non Modern standby
3.Page 34 : Add ADFB1,ADD1 and connect to +5V_S0 for Non Modern standby
4.Page 34 : Insert ADFB2,ADFB4 and
depop ADFB9,ADU3,ADU4,ADU5,ADR122,ADR148,ADR149,ADR150,ADR155,ADC40,ADC41,ADC42,ADC43,ADC44,ADC45,ADC46
for Non Modern standby
5.Page 55,56 : Change PC260,PC261,PC268~PC271,PC280~PC283 to 432-012414-01A
6.Page 55,56 : Add PC299 ~ PC303(432-012414-01A)
4.Page 66 : Change PQ210 to SM4307PSKPC-TRG
2020/12/28
1.Page 43 : Change PR110 and PR253 to 10K ohm for vender suggestion
2.Page 58 : Add CSR104 for vender suggestion
2020/12/29
1.Page 64 : Delete PC61,PC62 and Add PC304
2.Page 44 : Change PR370 to 22Kohm
2020/12/31
1.Page 21 : Swap USB_CAM_APU_1P/1N and USB_CAM_HUB_1P/1N in UTU4
2.Page 44 : Add PC305
2021/1/4
1.Page 10 : Connect APR19 to AJ6 of APU1
2.Page 12 : Connect USB_CAM_D_CPU_R to EGPIO121 of APU1
3.Page 28 : Swap HDMI_TX2_DP/DN_C and HDMI_TX0_DP/DN_C in LV6/LV8
2021/1/5
1.Page 46 : Add 2nd SCALAR DDR3 circuit (U5)
2021/1/6
1.Page 12 : Change APR519 to 100K ohm
2.Page 46 : Change RN1 ~ RN12(排組) to CSR115 ~ CSR162 (0201 電阻)
3.Page 46 : Connect CSC165 to DDRPLL_GND for vender review suggestion
4.Page 46 : Change U5_CK/U5_CK_N to U4_CK/U4_CK_N for vender review suggestion
5.Page 46 : Reserve DDR3 Termination Regulator(U8) circuit for vender review suggestion
6.Page 16 : Change UV2(HDMI Redriver+MUX) to UV4(HDMI Redriver)
7.Page 43 : Change PL5 and PL9 to 437-0110369-01A
8.Page 38 : Depop ECR160
2021/1/8
1.Page 44 : Change PL27 to 437-010008-01A , PR369 to 433-013557-01A,PC289 to 432-010203-01A,PC288 to 432-010024.
2.Page 46 : Del CSR115,CSR118,CSR119,CSR122,CSR123,CSR126,CSR127,CSR130,CSR131,CSR134,CSR135,CSR138,CSR139,CSR142,CSR143,
CSR146,CSR147,CSR150,CSR151,CSR154,CSR155,CSR158,CSR159,CSR162
3.Page 47 : Insert PQ30
2021/1/11
1.Page 13 : Insert APC120,APC121,APC122
2.Page 55 : Insert PTC1

2021/1/13
1.Page 28 : Swap HDMI_TX2_DP/DN_C and HDMI_TX0_DP/DN_C in LV6,LV8,RV9,RV10,RV13,RV14
2.Page 27 : Change DPSD1 & DPSD2 to AZ176S-04F
2021/1/14
1.Page 27,58 : Insert CSR63 and depop DPSR74
2.Page 28 : Swap HDMI_TX0_DP/DN_C and HDMI_TX2_DP/DN_C in DV2/DV11 pin 1,pin 2 ,pin 9,pin 10 for layout smooth
2021/1/15
1.Page 28 : Swap HDMI_TX0_DP/DN_C and HDMI_TX2_DP/DN_C in LV6/LV8 for layout smooth
2021/1/17
1.Page 59 : Insert GPR12 and GPR15 for EDP Hot Plug
2021/1/18
1.Page 59 : Delete GPR4,GPR1,GPQ1,GPR20,GPQ5,GPR21,GPR19.
2.Page 9,59 : Insert GPR5 and connect GPR5 to DP1_HPD.
3.Page 9 : Add APR521(NI) , APR522(NI) , APR523(NI)
4.Page 10 : Connect SFH1_SDA/SCL to SenJ1 and delete APQ18
5.Page 58 : Add SenJ2 circuit and connect INT2_G to U6 AK4 pin
6.Page 28 : Swap HDMI_TX0_DP/DN_C and HDMI_TX2_DP/DN_C in DV2/DV11 pin 1,pin 2 ,pin 9,pin 10 for layout smooth
2021/1/19
1.Page 38 : Insert ECR160 and connect to CODEC_EN for Modern standby
2.Page 38 : Depop ECR76 and ECR69 for Modern standby
3.Page 34 : Depop ADFB1,ADFB2,ADFB4,ADR122 and
insert ADFB9,ADU3,ADU4,ADU5,ADR148,ADR149,ADR150,ADR155,ADC40,ADC41,ADC42,ADC43,ADC44,ADC45,ADC46
for Modern standby
2021/1/20
1.Page 38 : Insert ECR76
2.Page 12 :Connect APR18 to +3V3_S5 and ECR160 for Modern standby.
3.Page 56 :Depop PEC31
4.Page 13 :Depop APC120 and Insert APC119
2021/1/21
1.Page 16 : Change UV4(HDMI Redriver) to UV2(HDMI Redriver+MUX)
2.Page 59 : Insert GPR5
3.Page 16 : Depop RV61,RV62
4.Page 28 : Depop HDOC2 ~ HDOC9 and add offpage to HDMI_OUT_SCL and HDMI_OUT_SDA
5.Page 10 : Connect INT1_G and HDMI_WL_IN to APR206(NI)
2021/1/22
1.Page 16 : Depop RV24,RV56,RV57,RV58,RV59,RV61 and Delete RV62
2.Page 28 : Insert HDOC2 ~ HDOC9 and set to PROTO type
3.Page 16 : Delete SMB_DATA_SUS,SMB_CLK_SUS in UV2 and connect RVTP5 to HPD3.
4.Page 16 : Depop RV61,RV62,RV63 and connect RVTP8 / RVTP9 /RVT10 to SDA2 / SCL2 / HPD2.
5.Page 9 : Delete APR521,APR522,APR523 and connect DP1_AUXP_R,DP1_AUXN_R,DP1_HPD_R to APTP12,APTP13,APTP14
6.Page 9 : Connect DP1_HPD_R to APR88
7.Page 9,28 : Add HDOR36(NI) and connect to DP1_HPD_R
8.Page 16,59 : Connect RV58(NI) / RV59(NI) /RV61(NI) to IFPC_AUXP_SCL / IFPC_AUXP_SDA / GPU_HPD
2021/1/25
1.Page 10 : Add test point TP1 ~ TP5 for SMBUS rework usage
2.Page 10,59 : Change GPU_DETECT to GPU_CTF
3.Page 28 : Add HDOR37 and HDOR38 and depop HDOQ1, HDOR5,HDOR6
4.Page 44 : Change PL27 to 437-010003-01A
2021/1/26
1.Page 44 : Change PL27 to 437-010009-01A for USI suggestion

2.Page 44 : Change PR373 to 433-013639-01A for USI suggestion
3.Page 44 : Change PC289 to 432-011925-01A for USI suggestion
4.Page 44 : Change PC288 to 432-010173-01A for USI suggestion
5.Page 44 : Change PR369 to 433-010279-01A for USI suggestion
6.Page 43,52 : Change PU4,PU5,PU11,PU12 to 436-150137-01A for USI suggestion
2021/2/4
1.Page 59 : Depop GPR17,GPR18

From YOGA27-ACN2_AMD_SDV_X02_1231Y20 to YOGA27-ACN2_AMD_SIT_X03_0218Y21 in SIT

2021/2/18
1.Page 66 : Change PR7161 to 433-012788-01A
2021/2/19
1.Page 10,59 : Rename GPU_GC6_WAKE_BOMACO_EN to GPU_DET
2021/2/23
1.Page 10 : Add APQ10 circuit for GPU_PWR_EN
2.Page 10 : Change APR159 from short PAD to 0 ohm resistor(NI)
3.Page 12 : Add APR522(NI) for AGPIO68
4.Page 10,12,15 : Add test point in AGPIO84,AGPIO86,AGPIO89,EGPIO70,EGPIO76,EGPIO140,EGPIO142,AGPIO256,AGPIO257,AGPIO258,
AGPIO259,AGPIO260,AGPIO261,AGPIO262,AGPIO263,AGPIO264,AGPIO265,AGPIO267,AGPIO268,AGPIO269,AGPIO271
2021/2/24
1.Page 10,12,15 : Remove test point in AGPIO86,EGPIO76,AGPIO259,AGPIO260,AGPIO261,AGPIO262,AGPIO263,AGPIO264,AGPIO265,
AGPIO267,AGPIO268

teknisi-indonesia.com

2.Page 66 : Change PR7161 from 39Kohm to 27Kohm
3.Page 10,12,15 : DEL APTP15,17,18,20,22,23,24,34,35
2021/2/25
1.Page 12,21,24,30,37,45 : Change APR518,ECR160,UTR14,UTR15,CRR4,CRR5,MER28,ISR2,ISR3,ISR4,ISR5,ISR10,ISR12,ISR13,CSR46,
CSR47,CSR48,CSR49,CSR92,CSR93,CSR94,CSR95
from 0 ohm to short pad
2021/2/26
1.Page 15 : Change SBJ1 and SBJ2 property from PROTO to I
2021/3/2
1.Page 23 : Insert TMR1 and depop TMF1
2.Page 23 : Add UTU5 circuit
2021/3/3
1.Page 58 : Add CSR168
2.Page 46 : Add CSR105
3.Page 23,34 : Change ADR155,TMR1 to 0603 size.
4.Page 23 : Swap P/N polarity in CML2
5.Page 23,34 : Change ADR155,TMR1 to 0603 short pad
2021/3/4
1.Page 34 : Change ADR12,ADR13,ADR148,ADR149,ADR150 from 0 ohm to short pad
2021/3/5
1.Page 34 : Change ADU4, ADU5 circuit to ADQ5,ADQ6,ADQ7 mosfet circuit for Modern standby
2021/3/9
1.Page 16 : Insert RV24
2.Page 34 : Add ADFB12 to isolate digital and analog for audio codec
2021/3/10
1.Page 45 : Add CSR173, CSR174 and 靠近 U6
2021/3/11
1.Page 13 : Add APC140,APC141,APC142 for +1V2_MEM_S3
2.Page 13 : Add APC143,APC144,APC145 for +VDDIO_VPH
3.Page 13 : Change APFB1 to APR523
4.Page 35 : ADC37,ADC38 change to 22UF
2021/3/12
1.Page 15 : Depop SBJ2,SC945,SC947,SBR7,SBR8,SBR9,SBR10,SBR11,SBR12
2021/3/16
1.Page 23 : Depop U7,CMR5
2.Page 10,59 : Change GPU_CTF to GPU_DETECT
2021/3/17
1.Page 21 : Delete UTC17(47UF),UTC18(47UF) and add UTC21(100UF)
2021/3/22
1.Page 38 : Insert ECR159 and connect to GPU_PWR_EN
2.Page 10 : Depop APQ10
3.Page 20 : Insert BOR3 and BOQ3 for +3V3_S0 Bleed off

2021/3/23
1.Page 16 : Insert RV114,RV30,RV32,RV38,RV46,RV48 and depop RV31,RV33,RV43,RV39,RV47,RV49
for HDMI out signal fine tune
EQ3/2/1/0=0101
SW1/0=11
FG2/1/0=110
2.Page 45 : Insert CSR72
3.Page 20 : Depop BOR3
4.Page 13 : Add APR524
5.Page 10 : Depop APR503

From YOGA27-ACN2_AMD_SIT_X03_0323Y21 to YOGA27-ACN2_AMD_SVT_X04_0406Y21 in SVT

2021/4/6
1.Page 12 : Change APC107 from 15pF to 12pF for vender suggestion
2.Page 32 : Change LNC11 and LNC12 from 22pF to 27pF for vender suggestion
3.Page 45 : Change CSC15 and CSC16 from 12pF to 15pF for vender suggestion
2021/4/9
1.Change Name from ACN2 to ACH2
2.Page 66 : Change R7161 to 33K ohm
2021/4/13
1.Page 12 : Depop APR519 and APQ4
2021/4/28
1.Page 34 : Change ADR157 to 51K ohm and insert ADC47
2021/4/29
1.Page 50 : 之前Yoga 27 SIT有1V8_S5_PG會有抖動的問題
修改料件如下,目前都有用
PC45 6800PF 3300PF 432-010173-01A
PR53 1.6K 3K 433-010279-01A
PR58 100K 62K 433-013639-01A
PL4 2.2uH 0.47uH 437-010009-01A

AVC	Asia Vital Components Co., Ltd.
Title	BIS EE Change List 4
Size	Yoga27-ACH2-AMD_EBN
Date	Thursday, April 29, 2021
Sheet	89 of 79

+12V_S5

Max Load:2A

Vout	12V
Vin	20V
Switch Freq	340KHz
ocp	5.1A
Vin_Iripple	10uF/1A
Choke size	15uH/7.6x6.8mm
Choke Idc/Isat	3A/6.5A
Choke DCR	105mohm
Cin CAP	10uF,0.1uF
Cout CAP	10uFx2
Cout CAP_ESR	
LIR	

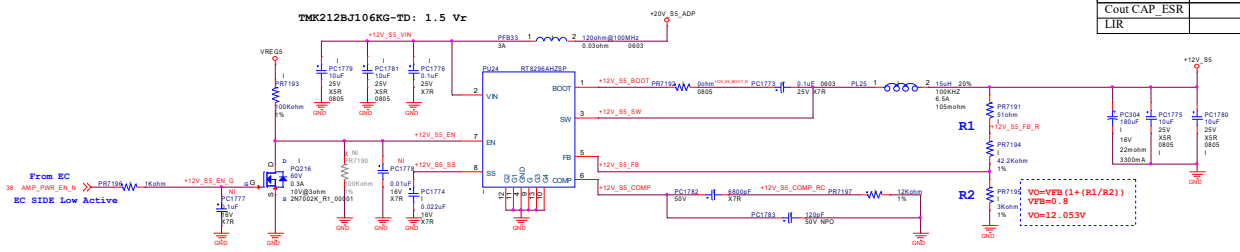

Asia Vital Components Co., Ltd.

Title	P64 +12V_S5		
Size C	Document Number Yoga27-ACH2 AMD FP6		Rev X10
Date: Thursday, April 29, 2021		Sheet 64 of 70	

Standoff / Mounting Hole

FIDUCIAL MARK

SCREW

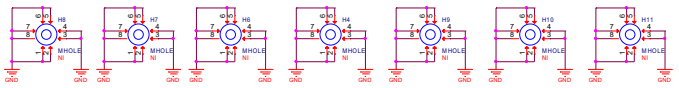

Label

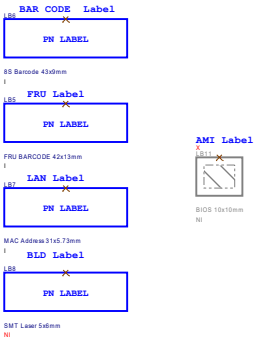

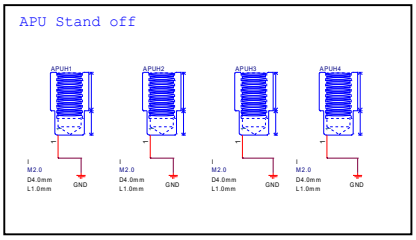

AVC Asia Vital Components Co., Ltd.			
Title: P65 Mounting Hole/ PCB/ Metal			
Size: C	Document Number: Yoga27-ACH2 AMD FP6		Rev: X10
Date: Thursday, April 29, 2021	Sheet 65 of 70		

PD_VOUT

Max Load:3.25A

Vout	5,9,15,20V
Vin	20V
Switch Freq	
ocp	4A
Vin_Iripple	10uF/1A*3
Choke size	10uH/7.6x6.8mm
Choke Idc/Isat	12A
Choke DCR	68mohm
Cin CAP	10uF*3
Cout CAP	10uFx3+47uF
Cout CAP_ESR	
LIR	

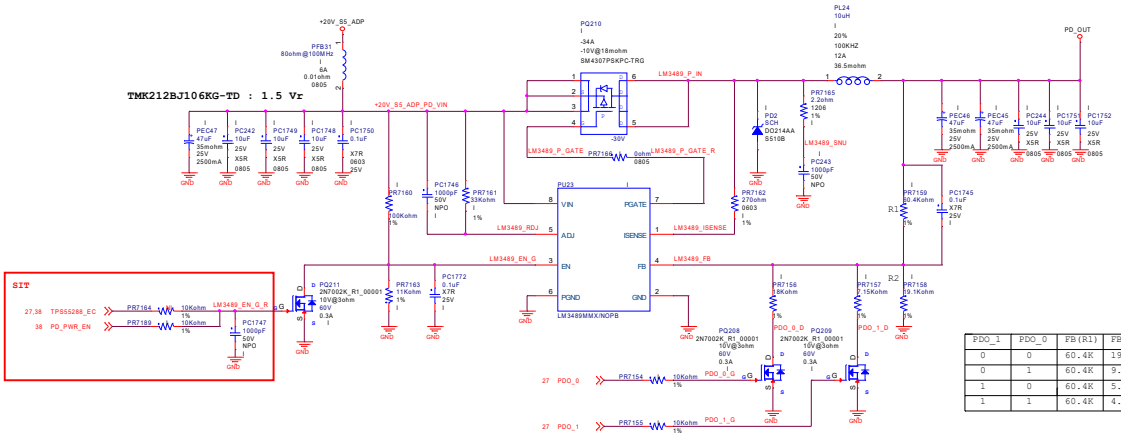

PDO_1	PDO_0	FB(R1)	FB(R2)	VOUT
0	0	60.4K	19.1K	5.15V
0	1	60.4K	9.266K	9.26V
1	0	60.4K	5.2K	15.62V
1	1	60.4K	4.035K	19.78V

Asia Vital Components Co., Ltd.

Title	P66 BUCK BOOST PD		
Size C	Document Number Yoga27-ACH2 AMD FP6		Rev X10
Date: Thursday, April 29, 2021		Sheet 66 of 70	

Flex I/O Lane	0	1	2	3	4	5	6	7	8	9	10	11	12	13	14	15	12	13	14	15
Raven Ridge High Speed I/O (HSIO) Type and Lane	USB3.1 Gen1	USB3.1 Gen1	USB3.1 Gen1	USB3.1 Gen1	P_HUB_0	P_HUB_1	P_HUB_2	P_HUB_3	P_GPP_0	P_GPP_1	P_GPP_2	P_GPP_3	P_GFX_0	P_GFX_1	P_GFX_2	P_GFX_3	P_GFX_4	P_GFX_5	P_GFX_6	P_GFX_7
											SATA_0	SATA_1								
AIO540 AM4 HSIO			Side USB 3.1 (gen 1)	Side USB 3.1 (gen 1)	M.2 SSD	M.2 SSD	M.2 SSD	M.2 SSD	LAN	M.2 WFI	HDD	M.2 SSD(SATA)	GPU	GPU	GPU	GPU	GPU	GPU	GPU	GPU

USB2.0	1	2	3	4
AIO540 AM4 HSIO	USB2.0 HUB1	Rear USB 3.1	Side USB 3.1	Side USB 3.1

Asia Vital Components Co., Ltd.

Title	P67 HSIO Port Map	
Size C	Document Number Yoga27-ACH2 AMD FP6	Rev X10
Date: Thursday, April 29, 2021	Sheet 67 of 70	

GPU_FAN

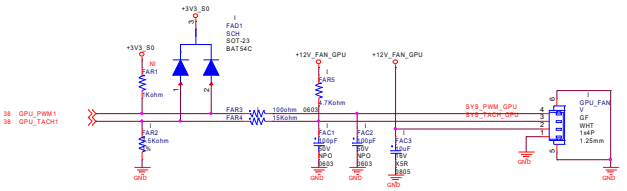

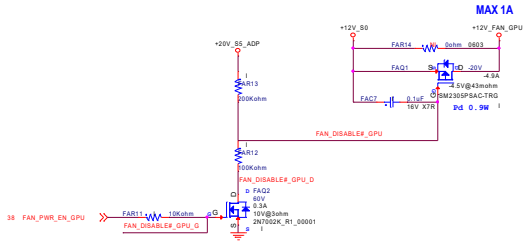

CONTROL PANEL / LED CIRCUITRY

Power Button

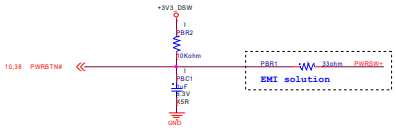

Power LED	
S0	LED is on steady WHT
S3	LED Blinks (1Hz/s)
S4 / S5	LED OFF

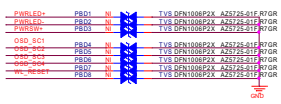

OSD_Scalar

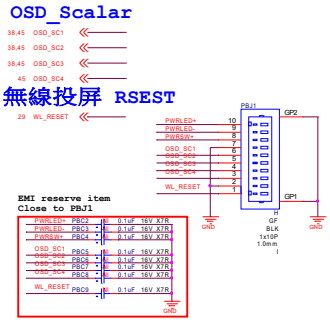

SYS_FAN

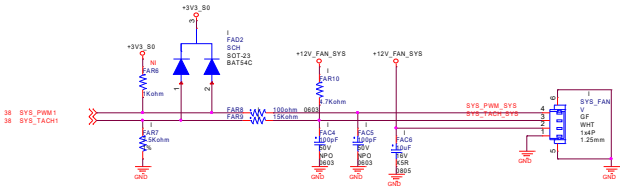

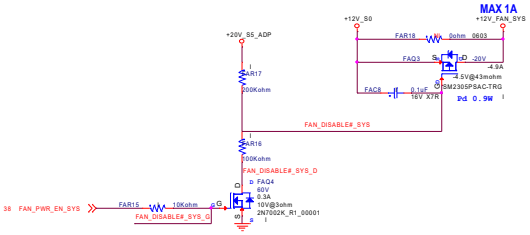

Asia Vital Components Co., Ltd.			
Title: P68 FAN/BTN/FPM/Sensor			
Size: C	Document Number: Yoga27-ACH2 AMD FP6		Rev: X10
Date: Thursday, April 29, 2021		Sheet 68 of 70	

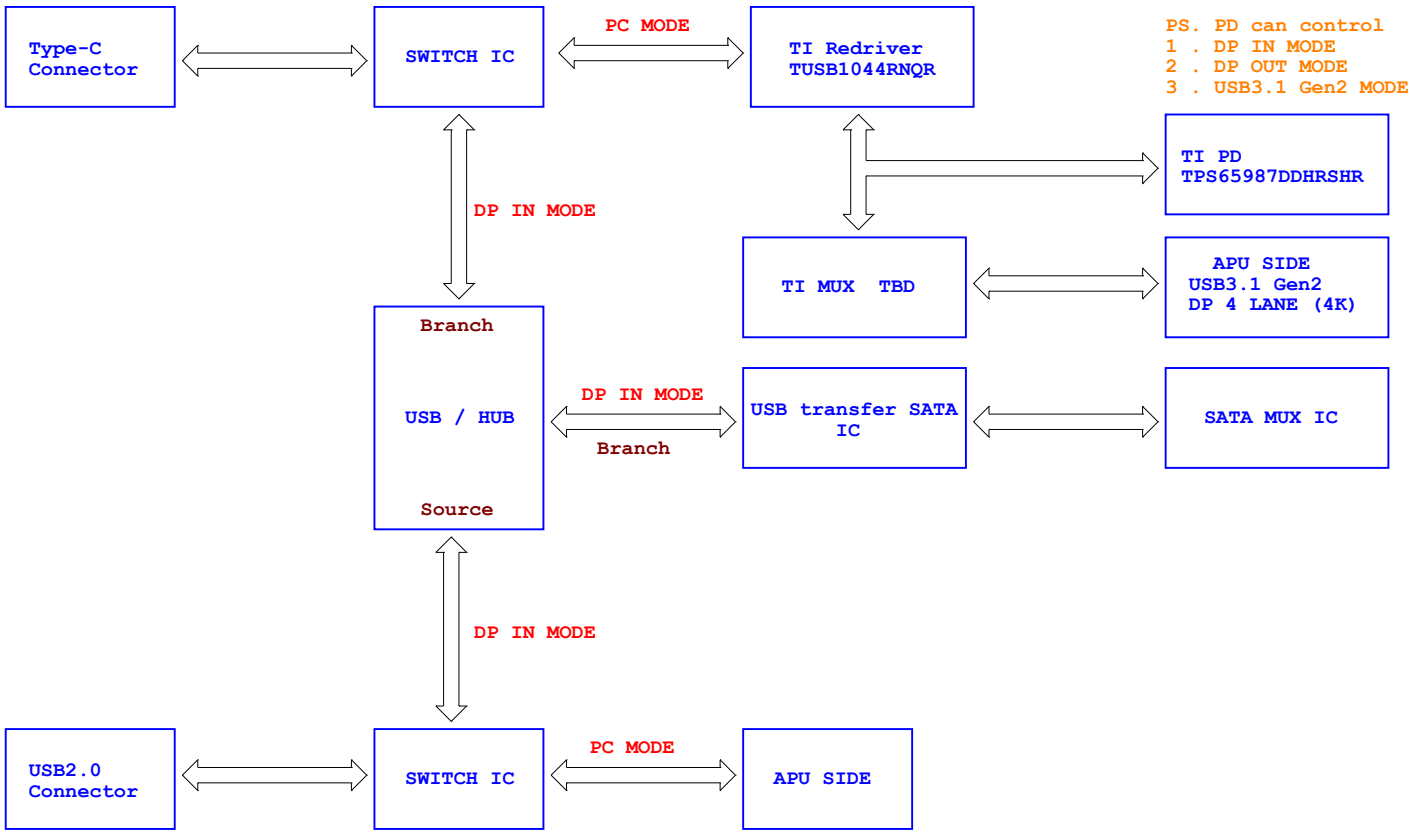

AVC Asia Vital Components Co., Ltd.			
Title: P69 BLOCK USER GUIDE			
Size: C	Document Number: Yoga27-ACH2 AMD FP6		Rev: X10
Date: Thursday, April 29, 2021		Sheet 69 of 70	

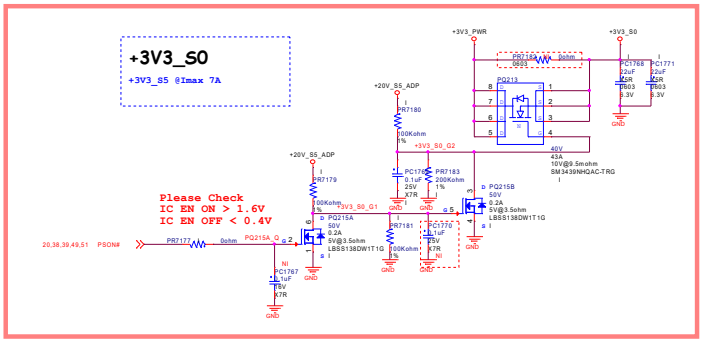

AVC Asia Vital Components Co., Ltd.			
Title: P70 +3V3_S0			
Size: C	Document Number: Yoga27-ACH2 AMD FP6		Rev: X10
Date: Thursday, April 29, 2021		Sheet 70 of 70	